Operator's Manual

LN-25X™

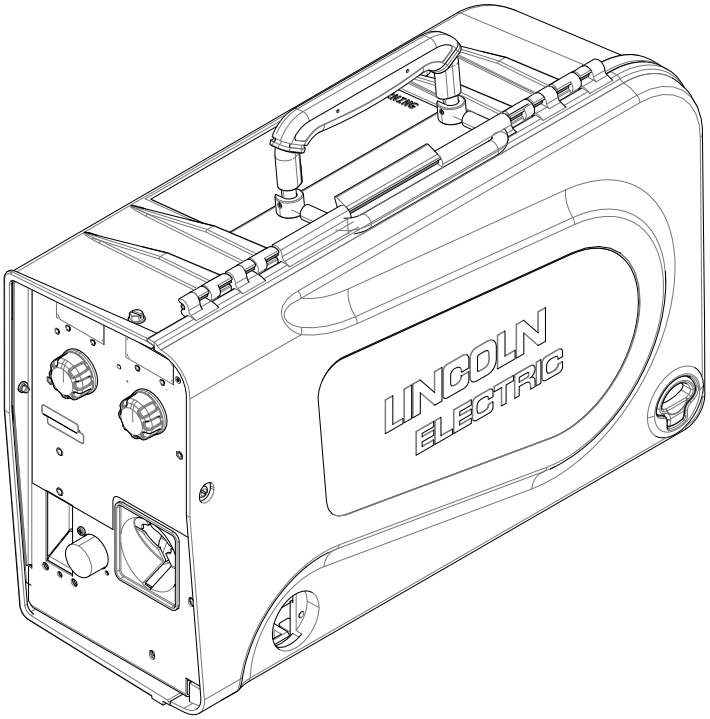

For use with machines having Code Numbers:

13584, 13585, 13586, 13587

GENUINE™ LINCOLN PARTS

Register your machine:
www.lincolnelectric.com/register

Authorized Service and Distributor Locator:
www.lincolnelectric.com/locator

Save for future reference

Date Purchased

Code: (ex: 10859)

Serial: (ex: U1060512345)

IM10677 | Issue Date May-23

© Lincoln Global, Inc. All Rights Reserved.

THE LINCOLN ELECTRIC COMPANY
22801 St. Clair Avenue • Cleveland, OH • 44117-1199 • U.S.A.
Phone: +1.216.481.8100 • www.lincolnelectric.com

THANK YOU FOR SELECTING A QUALITY PRODUCT BY LINCOLN ELECTRIC.

PLEASE EXAMINE CARTON AND EQUIPMENT FOR DAMAGE IMMEDIATELY

When this equipment is shipped, title passes to the purchaser upon receipt by the carrier. Consequently, claims for material damaged in shipment must be made by the purchaser against the transportation company at the time the shipment is received.

SAFETY DEPENDS ON YOU

Lincoln arc welding and cutting equipment is designed and built with safety in mind. However, your overall safety can be increased by proper installation ... and thoughtful operation on your part. **DO NOT INSTALL, OPERATE OR REPAIR THIS EQUIPMENT WITHOUT READING THIS MANUAL AND THE SAFETY PRECAUTIONS CONTAINED THROUGHOUT.** And, most importantly, think before you act and be careful.

⚠ WARNING

This statement appears where the information must be followed exactly to avoid serious personal injury or loss of life.

⚠ CAUTION

This statement appears where the information must be followed to avoid minor personal injury or damage to this equipment.

KEEP YOUR HEAD OUT OF THE FUMES.

DON'T get too close to the arc. Use corrective lenses if necessary to stay a reasonable distance away from the arc.

READ and obey the Safety Data Sheet (SDS) and the warning label that appears on all containers of welding materials.

USE ENOUGH VENTILATION or exhaust at the arc, or both, to keep the fumes and gases from your breathing zone and the general area.

IN A LARGE ROOM OR OUTDOORS, natural ventilation may be adequate if you keep your head out of the fumes (See below).

USE NATURAL DRAFTS or fans to keep the fumes away from your face.

If you develop unusual symptoms, see your supervisor. Perhaps the welding atmosphere and ventilation system should be checked.

WEAR CORRECT EYE, EAR & BODY PROTECTION

PROTECT your eyes and face with welding helmet properly fitted and with proper grade of filter plate (See ANSI Z49.1).

PROTECT your body from welding spatter and arc flash with protective clothing including woolen clothing, flame-proof apron and gloves, leather leggings, and high boots.

PROTECT others from splatter, flash, and glare with protective screens or barriers.

IN SOME AREAS, protection from noise may be appropriate.

BE SURE protective equipment is in good condition.

Also, wear safety glasses in work area **AT ALL TIMES.**

SPECIAL SITUATIONS

DO NOT WELD OR CUT containers or materials which previously had been in contact with hazardous substances unless they are properly cleaned. This is extremely dangerous.

DO NOT WELD OR CUT painted or plated parts unless special precautions with ventilation have been taken. They can release highly toxic fumes or gases.

Additional precautionary measures

PROTECT compressed gas cylinders from excessive heat, mechanical shocks, and arcs; fasten cylinders so they cannot fall.

BE SURE cylinders are never grounded or part of an electrical circuit.

REMOVE all potential fire hazards from welding area.

ALWAYS HAVE FIRE FIGHTING EQUIPMENT READY FOR IMMEDIATE USE AND KNOW HOW TO USE IT.

SECTION A: WARNINGS

CALIFORNIA PROPOSITION 65 WARNINGS

WARNING: Breathing diesel engine exhaust exposes you to chemicals known to the State of California to cause cancer and birth defects, or other reproductive harm.

- Always start and operate the engine in a well-ventilated area.
- If in an exposed area, vent the exhaust to the outside.
- Do not modify or tamper with the exhaust system.
- Do not idle the engine except as necessary.

For more information go to www.P65 warnings.ca.gov/diesel

WARNING: This product, when used for welding or cutting, produces fumes or gases which contain chemicals known to the State of California to cause birth defects and, in some cases, cancer. (California Health & Safety Code § 25249.5 *et seq.)*

WARNING: Cancer and Reproductive Harm www.P65warnings.ca.gov

ARC WELDING CAN BE HAZARDOUS. PROTECT YOURSELF AND OTHERS FROM POSSIBLE SERIOUS INJURY OR DEATH. KEEP CHILDREN AWAY. PACEMAKER WEARERS SHOULD CONSULT WITH THEIR DOCTOR BEFORE OPERATING.

Read and understand the following safety highlights. For additional safety information, it is strongly recommended that you purchase a copy of "Safety in Welding & Cutting - ANSI Standard Z49.1" from the American Welding Society, P.O. Box 351040, Miami, Florida 33135 or CSA Standard W117.2. A Free copy of "Arc Welding Safety" booklet E205 is available from the Lincoln Electric Company, 22801 St. Clair Avenue, Cleveland, Ohio 44117-1199.

BE SURE THAT ALL INSTALLATION, OPERATION, MAINTENANCE AND REPAIR PROCEDURES ARE PERFORMED ONLY BY QUALIFIED INDIVIDUALS.

FOR ENGINE POWERED EQUIPMENT.

1.a. Turn the engine off before troubleshooting and maintenance work unless the maintenance work requires it to be running.

1.b. Operate engines in open, well-ventilated areas or vent the engine exhaust fumes outdoors.

1.c. Do not add the fuel near an open flame welding arc or when the engine is running. Stop the engine and allow it to cool before refueling to prevent spilled fuel from vaporizing on contact with hot engine parts and igniting. Do not spill fuel when filling tank. If fuel is spilled, wipe it up and do not start engine until fumes have been eliminated.

1.d. Keep all equipment safety guards, covers and devices in position and in good repair. Keep hands, hair, clothing and tools away from V-belts, gears, fans and all other moving parts when starting, operating or repairing equipment.

1.e. In some cases it may be necessary to remove safety guards to perform required maintenance. Remove guards only when necessary and replace them when the maintenance requiring their removal is complete. Always use the greatest care when working near moving parts.

1.f. Do not put your hands near the engine fan. Do not attempt to override the governor or idler by pushing on the throttle control rods while the engine is running.

1.g. To prevent accidentally starting gasoline engines while turning the engine or welding generator during maintenance work, disconnect the spark plug wires, distributor cap or magneto wire as appropriate.

1.h. To avoid scalding, do not remove the radiator pressure cap when the engine is hot.

1.i. Using a generator indoors CAN KILL YOU IN MINUTES.

1.j. Generator exhaust contains carbon monoxide. This is a poison you cannot see or smell.

1.k. NEVER use inside a home or garage, EVEN IF doors and windows are open.

1.l. Only use OUTSIDE and far away from windows, doors and vents.

1.m. Avoid other generator hazards. READ MANUAL BEFORE USE.

ELECTRIC AND MAGNETIC FIELDS MAY BE DANGEROUS

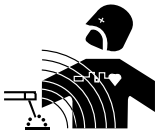

2.a. Electric current flowing through any conductor causes localized Electric and Magnetic Fields (EMF). Welding current creates EMF fields around welding cables and welding machines

2.b. EMF fields may interfere with some pacemakers, and welders having a pacemaker should consult their physician before welding.

2.c. Exposure to EMF fields in welding may have other health effects which are now not known.

2.d. All welders should use the following procedures in order to minimize exposure to EMF fields from the welding circuit:

2.d.1. Route the electrode and work cables together - Secure them with tape when possible.

2.d.2. Never coil the electrode lead around your body.

2.d.3. Do not place your body between the electrode and work cables. If the electrode cable is on your right side, the work cable should also be on your right side.

2.d.4. Connect the work cable to the workpiece as close as possible to the area being welded.

2.d.5. Do not work next to welding power source.

ELECTRIC SHOCK CAN KILL.

3.a. The electrode and work (or ground) circuits are electrically “hot” when the welder is on. Do not touch these “hot” parts with your bare skin or wet clothing. Wear dry, hole-free gloves to insulate hands.

3.b. Insulate yourself from work and ground using dry insulation. Make certain the insulation is large enough to cover your full area of physical contact with work and ground.

In addition to the normal safety precautions, if welding must be performed under electrically hazardous conditions (in damp locations or while wearing wet clothing; on metal structures such as floors, gratings or scaffolds; when in cramped positions such as sitting, kneeling or lying, if there is a high risk of unavoidable or accidental contact with the workpiece or ground) use the following equipment:

- Semiautomatic DC Constant Voltage (Wire) Welder.
- DC Manual (Stick) Welder.
- AC Welder with Reduced Voltage Control.

3.c. In semiautomatic or automatic wire welding, the electrode, electrode reel, welding head, nozzle or semiautomatic welding gun are also electrically “hot”.

3.d. Always be sure the work cable makes a good electrical connection with the metal being welded. The connection should be as close as possible to the area being welded.

3.e. Ground the work or metal to be welded to a good electrical (earth) ground.

3.f. Maintain the electrode holder, work clamp, welding cable and welding machine in good, safe operating condition. Replace damaged insulation.

3.g. Never dip the electrode in water for cooling.

3.h. Never simultaneously touch electrically “hot” parts of electrode holders connected to two welders because voltage between the two can be the total of the open circuit voltage of both welders.

3.i. When working above floor level, use a safety belt to protect yourself from a fall should you get a shock.

3.j. Also see Items 6.c. and 8.

ARC RAYS CAN BURN.

4.a. Use a shield with the proper filter and cover plates to protect your eyes from sparks and the rays of the arc when welding or observing open arc welding. Headshield and filter lens should conform to ANSI Z87. I standards.

4.b. Use suitable clothing made from durable flame-resistant material to protect your skin and that of your helpers from the arc rays.

4.c. Protect other nearby personnel with suitable, non-flammable screening and/or warn them not to watch the arc nor expose themselves to the arc rays or to hot spatter or metal.

FUMES AND GASES CAN BE DANGEROUS.

5.a. Welding may produce fumes and gases hazardous to health. Avoid breathing these fumes and gases. When welding, keep your head out of the fume. Use enough ventilation and/or exhaust at the arc to keep fumes and gases away from the breathing zone. **When welding hardfacing (see instructions on container or SDS) or on lead or cadmium plated steel and other metals or coatings which produce highly toxic fumes, keep exposure as low as possible and within applicable OSHA PEL and ACGIH TLV limits using local exhaust or mechanical ventilation unless exposure assessments indicate otherwise. In confined spaces or in some circumstances, outdoors, a respirator may also be required. Additional precautions are also required when welding on galvanized steel.**

5. b. The operation of welding fume control equipment is affected by various factors including proper use and positioning of the equipment, maintenance of the equipment and the specific welding procedure and application involved. Worker exposure level should be checked upon installation and periodically thereafter to be certain it is within applicable OSHA PEL and ACGIH TLV limits.

5.c. Do not weld in locations near chlorinated hydrocarbon vapors coming from degreasing, cleaning or spraying operations. The heat and rays of the arc can react with solvent vapors to form phosgene, a highly toxic gas, and other irritating products.

5.d. Shielding gases used for arc welding can displace air and cause injury or death. Always use enough ventilation, especially in confined areas, to insure breathing air is safe.

5.e. Read and understand the manufacturer’s instructions for this equipment and the consumables to be used, including the Safety Data Sheet (SDS) and follow your employer’s safety practices. SDS forms are available from your welding distributor or from the manufacturer.

5.f. Also see item 1.b.

WELDING AND CUTTING SPARKS CAN CAUSE FIRE OR EXPLOSION.

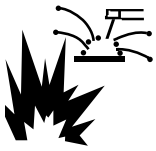

6.a. Remove fire hazards from the welding area. If this is not possible, cover them to prevent the welding sparks from starting a fire. Remember that welding sparks and hot materials from welding can easily go through small cracks and openings to adjacent areas. Avoid welding near hydraulic lines. Have a fire extinguisher readily available.

6.b. Where compressed gases are to be used at the job site, special precautions should be used to prevent hazardous situations. Refer to “Safety in Welding and Cutting” (ANSI Standard Z49.1) and the operating information for the equipment being used.

6.c. When not welding, make certain no part of the electrode circuit is touching the work or ground. Accidental contact can cause overheating and create a fire hazard.

6.d. Do not heat, cut or weld tanks, drums or containers until the proper steps have been taken to insure that such procedures will not cause flammable or toxic vapors from substances inside. They can cause an explosion even though they have been “cleaned”. For information, purchase “Recommended Safe Practices for the Preparation for Welding and Cutting of Containers and Piping That Have Held Hazardous Substances”, AWS F4.1 from the American Welding Society (see address above).

6.e. Vent hollow castings or containers before heating, cutting or welding. They may explode.

6.f. Sparks and spatter are thrown from the welding arc. Wear oil free protective garments such as leather gloves, heavy shirt, cuffless trousers, high shoes and a cap over your hair. Wear ear plugs when welding out of position or in confined places. Always wear safety glasses with side shields when in a welding area.

6.g. Connect the work cable to the work as close to the welding area as practical. Work cables connected to the building framework or other locations away from the welding area increase the possibility of the welding current passing through lifting chains, crane cables or other alternate circuits. This can create fire hazards or overheat lifting chains or cables until they fail.

6.h. Also see item 1.c.

6.I. Read and follow NFPA 51B “Standard for Fire Prevention During Welding, Cutting and Other Hot Work”, available from NFPA, 1 Batterymarch Park, PO box 9101, Quincy, MA 022690-9101.

6.j. Do not use a welding power source for pipe thawing.

CYLINDER MAY EXPLODE IF DAMAGED.

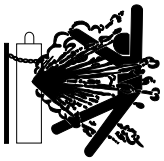

7.a. Use only compressed gas cylinders containing the correct shielding gas for the process used and properly operating regulators designed for the gas and pressure used. All hoses, fittings, etc. should be suitable for the application and maintained in good condition.

7.b. Always keep cylinders in an upright position securely chained to an undercarriage or fixed support.

7.c. Cylinders should be located:

- Away from areas where they may be struck or subjected to physical damage.
- A safe distance from arc welding or cutting operations and any other source of heat, sparks, or flame.

7.d. Never allow the electrode, electrode holder or any other electrically “hot” parts to touch a cylinder.

7.e. Keep your head and face away from the cylinder valve outlet when opening the cylinder valve.

7.f. Valve protection caps should always be in place and hand tight except when the cylinder is in use or connected for use.

7.g. Read and follow the instructions on compressed gas cylinders, associated equipment, and CGA publication P-I, “Precautions for Safe Handling of Compressed Gases in Cylinders,” available from the Compressed Gas Association, 14501 George Carter Way Chantilly, VA 20151.

FOR ELECTRICALLY POWERED EQUIPMENT.

8.a. Turn off input power using the disconnect switch at the fuse box before working on the equipment.

8.b. Install equipment in accordance with the U.S. National Electrical Code, all local codes and the manufacturer’s recommendations.

8.c. Ground the equipment in accordance with the U.S. National Electrical Code and the manufacturer’s recommendations.

Refer to http://www.lincolnelectric.com/safety for additional safety information.

TABLE OF CONTENTS

	PAGE
GENERAL DESCRIPTION	**7**
RECOMMENDED PROCESSES	7
PROCESS LIMITATIONS	7
EQUIPMENT LIMITATIONS	7
RECOMMENDED POWER SOURCES	7
OTHER POWER SOURCES	7
DESIGN FEATURES	7
INSTALLATION	**A-1**
TECHNICAL SPECIFICATIONS	A-1
SELECT SUITABLE LOCATIONS	A-2
ACROSS THE ARC SET-UP WITH CROSSLINC™ COMMUNICATION (RECOMMENDED)	A-3
ACROSS THE ARC SET-UPS WITHOUT CROSSLINC™ COMMUNICATION	A-3
RECOMMENDED ELECTRODE AND WORK CABLE SIZES FOR ARC WELDING	A-5
COAXIAL WELD CABLE	A-6
TRIGGER CONNECTOR	A-7
CHANGING THE GUN RECEIVER BUSHING	A-8
PROCEDURE TO INSTALL DRIVE ROLLS AND WIRE GUIDES	A-9
PRESSURE ARM ADJUSTMENT	A-9
GUN CONNECTION	A-10
SHIELDING GAS CONNECTION	A-10
OPERATION	**B-1**
POWER-UP SEQUENCE	B-1
CASE FRONT CONTROLS	B-2
DIGITAL METER OPERATION	B-4
SET-UP MENU	B-5
INTERNAL CONTROLS	B-9
REAR CONTROLS	B-11
OPTIONS/ACCESSORIES	**C.1**
MAINTENANCE	**D.1**
ROUTINE MAINTENANCE	D.1
PERIODIC MAINTENANCE	D.1
TROUBLESHOOTING	**E-1**
DIAGRAMS	**F-1**
Parts List	**parts.lincolnelectric.com**

Content/details may be changed or updated without notice. For most current Instruction Manuals, go to parts.lincolnelectric.com.

GENERAL DESCRIPTION

The LN-25X™ is a rugged, portable, across-the-arc wire feeder with CrossLinc™ and True Voltage Technology™ (TVT™). The LN-25X is able to use 12” spools. The Extra Torque model features additional torque gearing for reliable feeding of large diameter FCAW wires. When used with a CrossLinc equipped power source, this LN-25X allows the user to adjust the welding voltage at the wire feeder front panel without the need for a control cable. As a result, setup and changeover times reduced while productivity is increased. TVT does the thinking so you don’t have to. TVT learns. In as little as one weld, TVT begins to make the necessary power source adjustments to ensure that the voltage you set at the feeder will be the same voltage delivered to the arc. TVT remembers. Set point adjustments remain – even after the power to the LN-25X has been removed.

In addition to CrossLinc, the LN-25X wire feeder has the following features:

- Wire drive geared for great performance with both FCAW and GMAW wires up to 5/64” diameter.
- Plastic case molding from a high impact, flame retardant material which is lightweight and extremely durable. The patent pending design keeps the internal components protected in harsh environments.
- MAXTRAC™ drive system. The patented features on the MAXTRAC wire drive offer tool-less changing of the drive rolls and wire guides for quick spool changes.
- Tachometer feedback on the wire drive ensures accurate speed control with all wire types and environmental conditions.
- Bright digital meters which display voltage, current, and wire feed speed so that the user can accurately set and verify welding parameters.
- Rating of 450 amps at a 60% duty cycle.

RECOMMENDED PROCESSES

- GMAW
- FCAW

PROCESS LIMITATIONS

- Not recommended for stitch or spot welding.

EQUIPMENT LIMITATIONS

Power sources that include CrossLinc™ technology allow full functionality of the LN-25X™. The voltage output of the power source can be remotely controlled by the CrossLinc compatible LN-25X.

RECOMMENDED POWER SOURCES

The LN-25X™ can also be used with nearly any other Lincoln power source. However, if the power source us not compatible with CrossLinc™ Technology, then the Voltage must be set locally at the power source and not remotely from the LN-25X wire feeder.

OTHER POWER SOURCES

- CV-250, 300, 305, 400, 655
- DC-400, 600, 655
- Invertec V-350, V-450
- Multi-Weld 350
- Ranger 10,000, 3 Phase, 225, 250, 250 GXT
- Ranger 250 LPG, 305
- Cross Country 300
- Vantage 300, 400, 500, 520, 600
- Air Vantage 500, 600, 650
- Dual Vantage 700
- Flextec 450, 500, 500P, 650
- Engine Drive Welder with a wire feed module

DESIGN FEATURES

Loaded with Standard Features Controls

- Digital displays with large voltage and wire feed speed knobs.
- Trigger interlock for comfort when making long welds.
- Cold-feed switch for wire feeding without activating welding output
- Gas Purge switch for purging the gas path without activating welding output.

TECHNICAL SPECIFICATIONS -

MODEL SUMMARY					
K#	Description	Meters	Drive Roll Kit Included	Gun Bushing Installed	Gun Bushing Shipped Loose
K4267-1	LN-25X™	DIGITAL	----	K1500-2	K1500-1
K4267-2	LN-25X™ W/O FLOW METER (TWECO®)				
K4267-3	LN-25X™ W/ FLOW METER (TWECO®)				
K4267-4	LN-25X™ CE (TWIST MATE/DINSE)				
K4267-5	LN-25X™ EXTRA TORQUE (TWECO®)				

INPUT - SINGLE PHASE	
Input Voltage +/- 10%	Input Amperes @ Rated Output
15 - 110V DC	4

TEMPERATURE RANGES	
OPERATING TEMPERATURE RANGE	STORAGE TEMPERATURE RANGE
-14°F to 104°F (-10°C to 40°C)	-40°F to 122°F (-40°C to 50°C)

Thermal tests have been performed at ambient temperature. The duty cycle (duty factor) at 40°C has been determined by simulation.

RATED OUTPUT (ALL MODELS)	
Duty Cycle	Amperes
60%	450A
100%	325A

PHYSICAL DIMENSIONS				
Model	Height	Width	Depth	Weight
K4267-1 K4267-2 K4267-3 K4267-4 K4267-5	14.8 in (376 mm)	8.7 in (221 mm)	23.2 in (589 mm)	37 lbs (17 kg)

GEARING - WIRE FEED SPEED RANGE-WIRE SIZE				
GEARING	GMAW		FCAW	
	WFS RANGE	WIRE SIZES	WFS RANGE	WIRE SIZES
Extra torque K4267-5	50 □ 400 ipm (1.3 □ 10.1m/min)	.023 □ 1/16" (0.6 □ 1.6mm)	50 □ 400 ipm (1.3 □ 10.1m/min)	.030 - 3/32□ (0.8 □ 2.4mm)
Standard Speed K4267-2 K4267-3 K4267-4	50 □ 700 ipm (1.3 □ 17.7m/min)	.023 □ 1/16" (0.6 □ 1.6mm)	50 □ 700 ipm (1.3 □ 17.7m/min)	.030 - 5/64 (0.8 - 2.0mm)

Read entire Installation Section before installing the LN-25X™ .

INSTALLATION

⚠ WARNING

ELECTRIC SHOCK CAN KILL.

- **Turn the input power OFF at the disconnect switch or fuse box before attempting to connect or disconnect input power lines, output cables or control cables.**
- **Only qualified personnel should perform this installation.**
- **Do not touch metal portions of the LN-25X™ work clip when the welding power source is on.**
- **Do not attach the work clip to the wire feeder.**
- **Connect the work clip directly to the work, as close as possible to the welding arc.**
- **Turn power off at the welding power source before disconnecting the work clip from the work.**
- **Only use on power sources with open circuit voltages less than 110 VDC.**

SELECT SUITABLE LOCATION

For best wire feeding performance, place the LN-25X™ on a stable and dry surface. Keep the wire feeder in a vertical position. Do not operate the wire feeder on an angled surface of more than 15 degrees.

Do not submerge the LN-25X™.

The LN-25X™ is rated IP23 and is suitable for outdoor use.

The handle of the LN-25X™ is intended for moving the wire feeder about the work place only.

When suspending a wire feeder, insulate the hanging device from the wire feeder enclosure.

⚠ CAUTION

High Frequency Interference Protection

Locate the LN-25X™ away from radio controlled machinery. The normal operation of the LN-25X™ may adversely affect the operation of RF controlled equipment, which may result in bodily injury or damage to the equipment.

ACROSS THE ARC SET-UP WITH CROSSLINC™ (RECOMMENDED)

Place the power source Remote/Local switch in the Remote position.

Item	K#	Description
1	K4267-2, K4267-3, K4267-4, K4267-5	LN-25X™
2	KP1695-xx KP1696-xx KP1697-xx	Drive Roll Kit
3	See Magnum PRO Literature	Welding Gun
4	-	Flextec 350X™, 500X, 650X or Ranger® 330MPX
5	-	Welding Cables
6	-	Work Cable and Ground Clamp

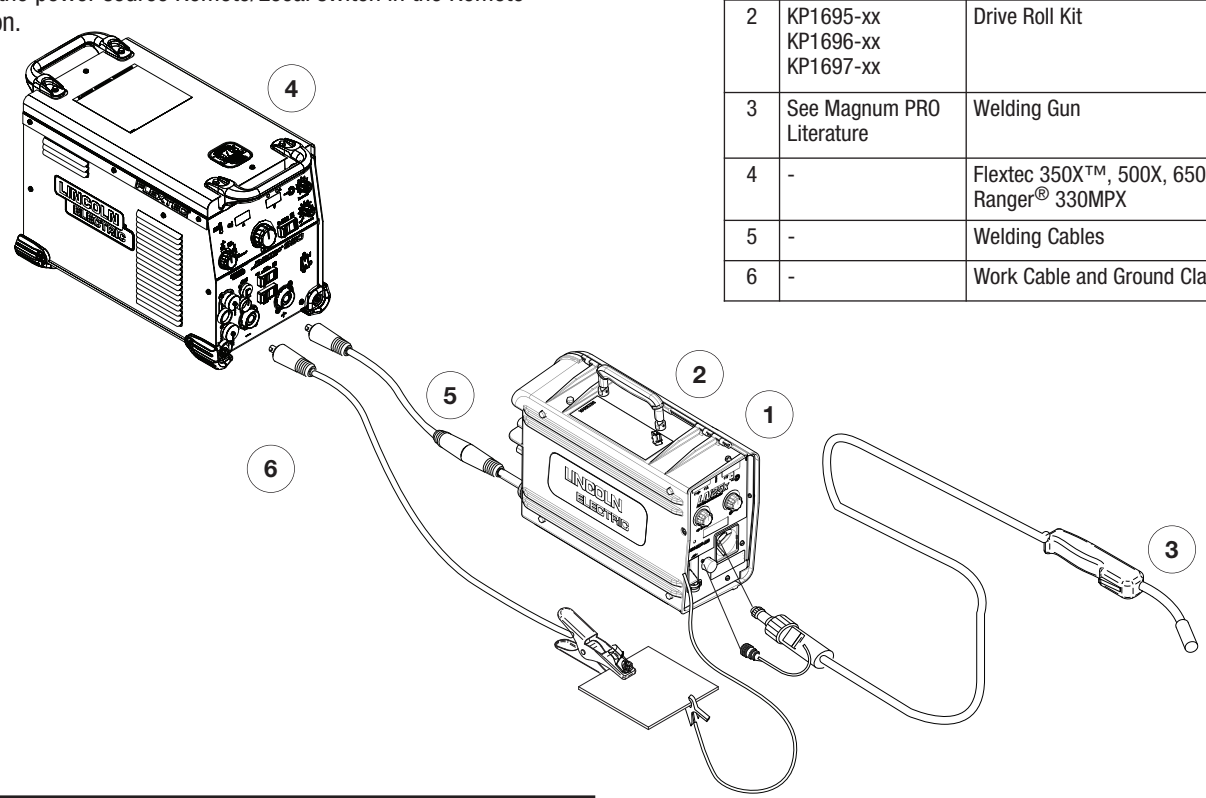

ACROSS THE ARC SET-UPS WITHOUT CROSSLINC™

CV Power Sources with Stud Connectors with Local/Remote Switch

Place the power source Remote/Local switch in the Local position.

Item	K#	Description
1	K4267-2, K4267-3, K4267-4, K4267-5	LN-25X™
2	KP1695-xx KP1696-xx KP1697-xx	Drive Roll Kit
3	See Magnum PRO Literature	Welding Gun
4	-	CV power source
5	-	Electrode Cable
6		Work Cable and Ground Clamp

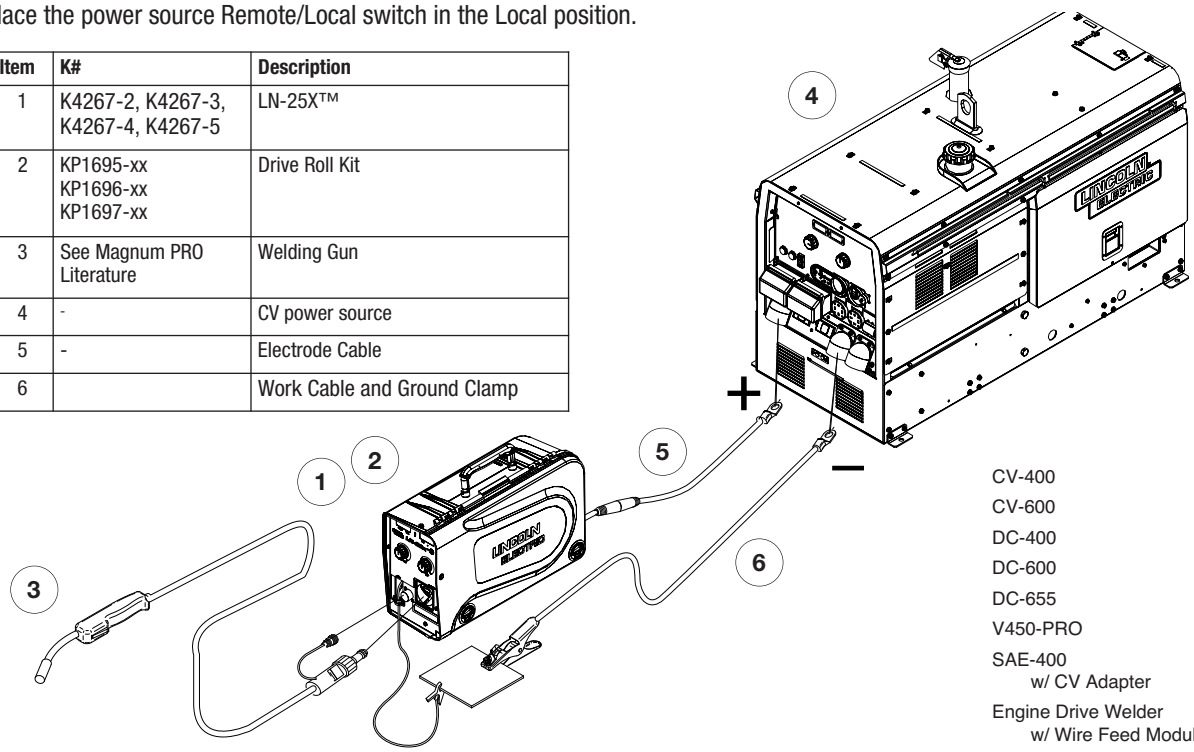

CV-400	Ranger 250 GXT
CV-600	Vantage 520SD
DC-400	Vantage 600
DC-600	Air Vantage 600
DC-655	Flextec 450
V450-PRO	Flextec 500P
SAE-400 w/ CV Adapter	
Engine Drive Welder w/ Wire Feed Module	

CV Power Sources with Stud Connectors and no Remote/Local Switch

Item	K#	Description
1	K4267-2, K4267-3, K4267-4, K4267-5	LN-25X™
2	KP1695-xx KP1696-xx KP1697-xx	Drive Roll Kit
3	See Magnum PRO Literature	Welding Gun
4	-	CV power source
5	-	Electrode Cables
6	-	Work Cable and Ground Clamp
7	K484	Jumper Plug Kit* (14-Pin)

*Not Shown

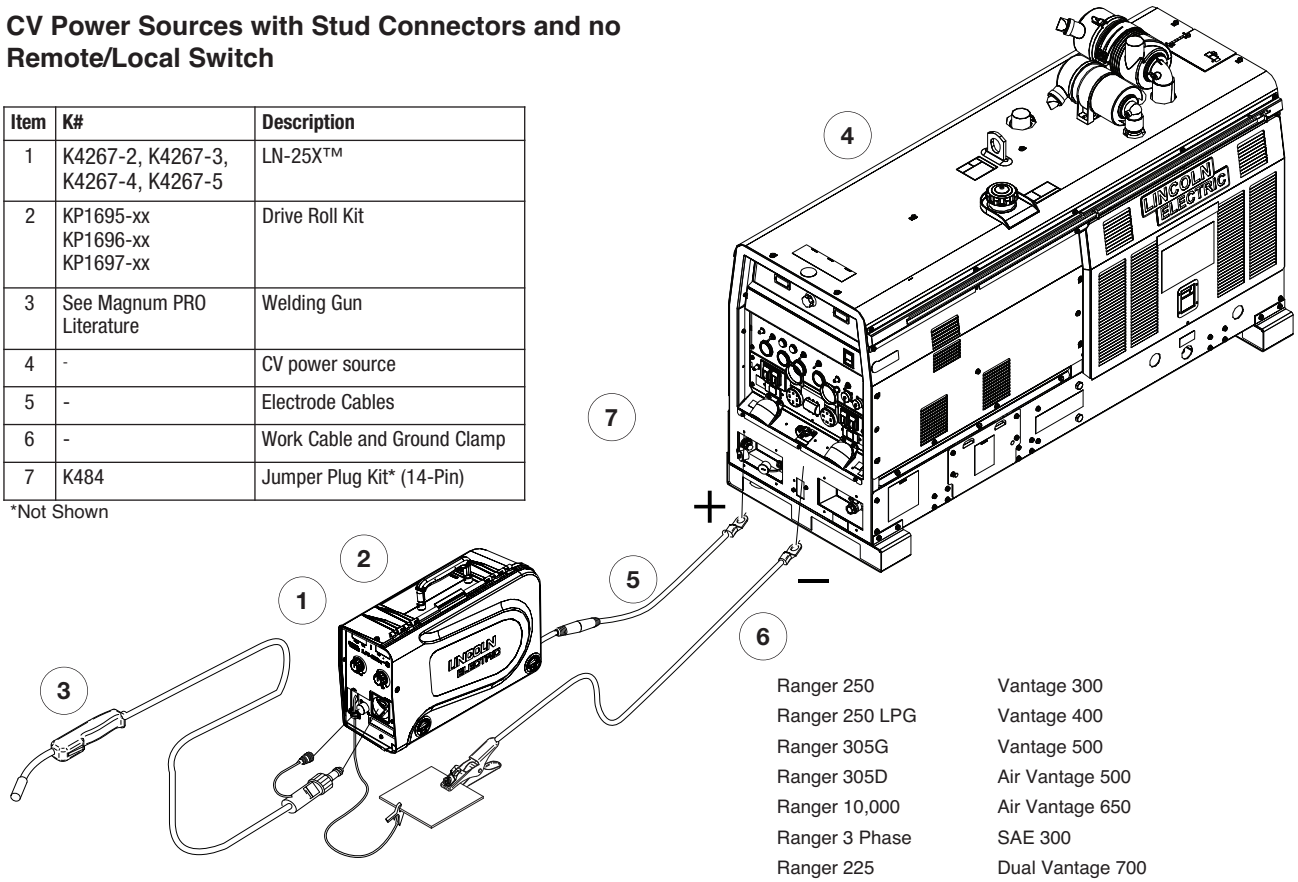

Ranger 250	Vantage 300
Ranger 250 LPG	Vantage 400
Ranger 305G	Vantage 500
Ranger 305D	Air Vantage 500
Ranger 10,000	Air Vantage 650
Ranger 3 Phase	SAE 300
Ranger 225	Dual Vantage 700
Ranger 225 GXT	Classic 300
Commander 300	

CV Power Source with Twist-Mate Connectors and no Remote/Local Switch

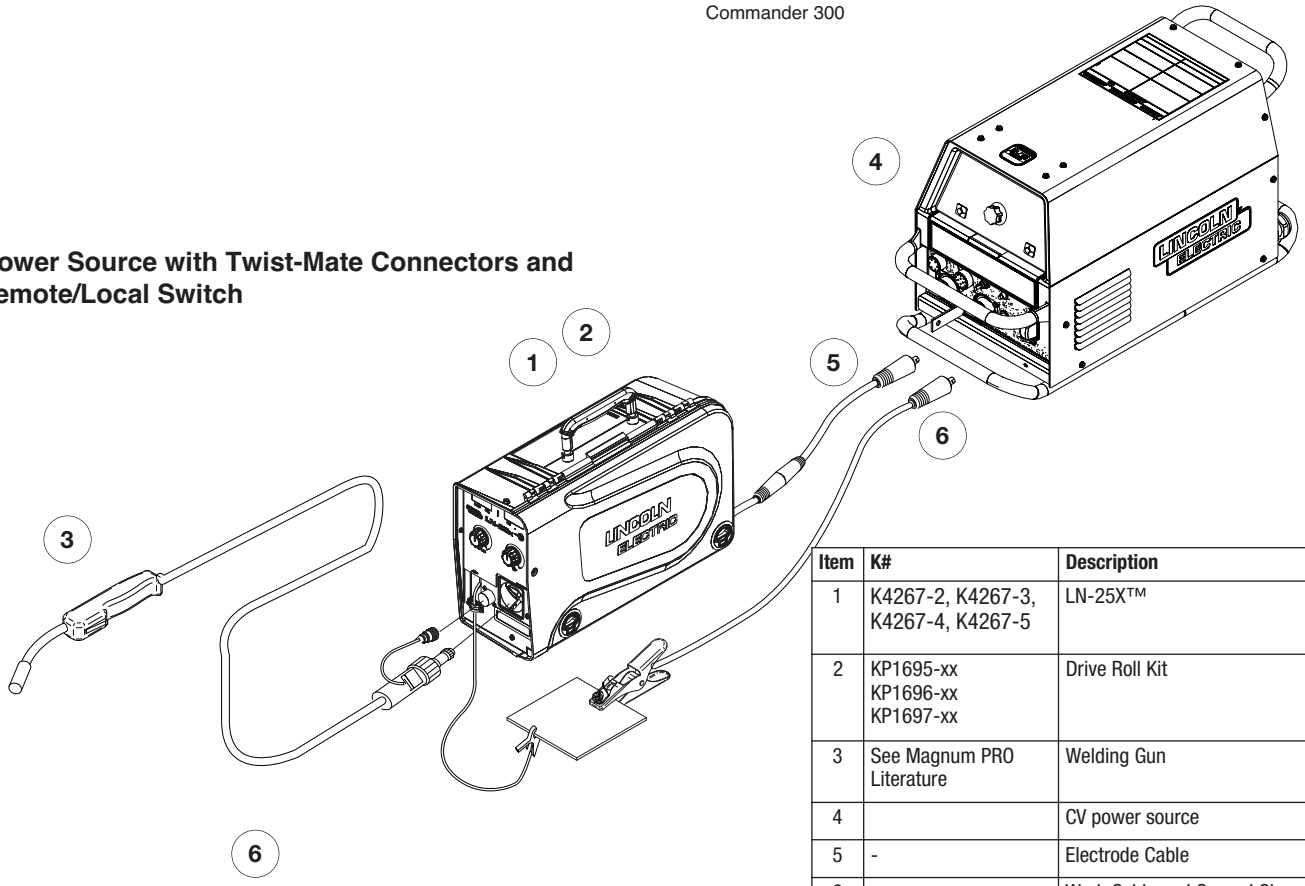

Item	K#	Description
1	K4267-2, K4267-3, K4267-4, K4267-5	LN-25X™
2	KP1695-xx KP1696-xx KP1697-xx	Drive Roll Kit
3	See Magnum PRO Literature	Welding Gun
4		CV power source
5	-	Electrode Cable
6	-	Work Cable and Ground Clamp

RECOMMENDED ELECTRODE AND WORK CABLE SIZES FOR ARC WELDING

(See Table A.1)

Tabulated below are copper cable sizes recommended for different currents and duty cycles. Lengths stipulated are the distance from the welder to work and back to the welder again. Cable sizes are increased for greater lengths primarily for the purpose of minimizing cable drop.

TABLE A.1

RECOMMENDED CABLE SIZES (RUBBER COVERED COPPER - RATED 167°F OR 75°C)**

Amperes	PERCENT DUTY CYCLE	CABLE SIZES FOR COMBINED LENGTHS OF ELECTRODE AND WORK CABLES				
		0 to 50Ft. (0 to15m)	50 to 100Ft. (15 to 30m)	100 to 150 Ft. (30 to 46m)	150 to 200 Ft. (46 to 61m)	200 to 250 Ft. (61 to 76m)
200	60	2	2	2	1	1/0
200	100	2	2	2	1	1/0
225	20	4 or 5	3	4 or 5	1	1/0
225	40 & 30	3	3	3	1	1/0
250	30	3	3	3	1	1/0
250	40	2	2	2	1	1/0
250	60	1	1	1	1	1/0
250	100	1	1	1	1	1/0
300	60	1	1	1	1/0	1/0
350	100	2/0	2/0	2/0	2/0	2/0
350	60	1/0	1/0	1/0	2/0	3/0
400	60	2/0	2/0	2/0	3/0	4/0
400	100	3/0	3/0	3/0	3/0	4/0
500	60	2/0	2/0	2/0	3/0	4/0

** Tabled values are for operation at ambient temperatures of 104°F(40°C) and below. Applications above 104°F(40°C) may require cables larger than recommended, or cables rated higher than 167°F(75°C).

TRIGGER CONNECTOR

There is one circular connector for the gun trigger on the front of the LN-25X™

Picture	Function	Pin	Wiring
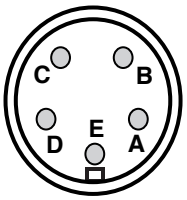	5 PIN TRIGGER CONNECTOR FOR PUSH-ONLY GUNS.	A	15 VOLT SUPPLY
		B	NOT USED
		C	TRIGGER
		D	DUAL PROCEDURE SWITCH
		E	15 VOLT SUPPLY

⚠ WARNING

ELECTRIC SHOCK CAN KILL.

- **Do not touch electrically live parts.**

CHANGING THE GUN ADAPTER BUSHING

⚠ WARNING

ELECTRIC SHOCK CAN KILL.

- **Turn the input power OFF at the welding power source before installation or changing drive rolls and/or guides.**
- **Do not touch electrically live parts.**
- **When inching with the gun trigger, electrode and drive mechanism are "hot" to work and ground and could remain energized several seconds after the gun trigger is released.**

- **Do not operate with covers, panels or guards removed or open.**
- **Only qualified personnel should perform maintenance work.**

Tools required:

- ¼" hex key wrench

Note: Some gun adapters do not require the use of the thumb screw.

1. **Turn power off at the welding power source.**
2. Remove the welding wire from the wire drive.
3. Remove the thumb screw from the wire drive.
4. Remove the welding gun from the wire drive.
5. Loosen the socket head cap screw that holds the connector bar against the gun adapter. Important: **Do not attempt to completely remove the socket head cap screw.**
6. Remove the outer wire guide, and push the gun adapter out of the wire drive. Because of the precision fit, light tapping may be required to remove the gun bushing.
7. Disconnect the shielding gas hose from the gun bushing, if required.
8. Connect the shielding gas hose to the new gun adapter, if required.
9. Rotate the gun adapter until the thumb screw hole aligns with the thumb screw hole in the feedplate. Slide the gun receiver bushing into the wire drive and verify the thumb screw holes are aligned.
10. Tighten the socket head cap screw.
11. Insert the welding gun into the gun adapter and tighten the thumb screw.

FIGURE A.2

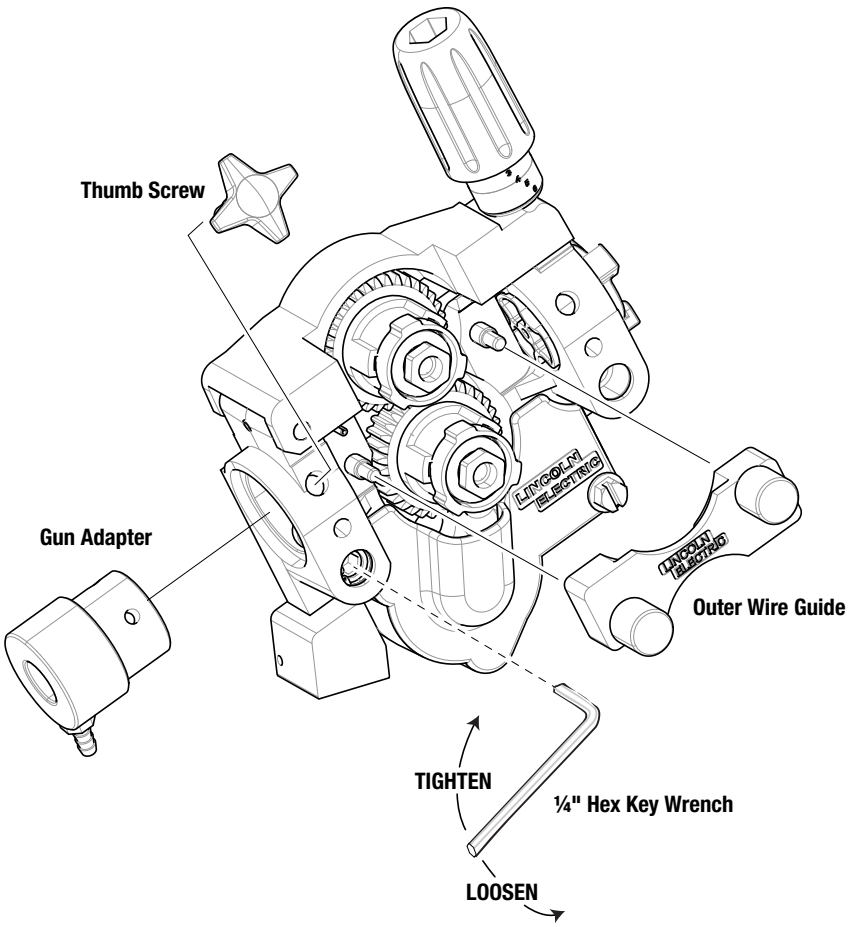

PROCEDURE TO INSTALL DRIVE ROLLS AND WIRE GUIDES

⚠ WARNING

ELECTRIC SHOCK CAN KILL.

- **Turn the input power OFF at the welding power source before installation or changing drive rolls and/or guides.**
- **Do not touch electrically live parts.**
- **When inching with the gun trigger, electrode and drive mechanism are "hot" to work and ground and could remain energized several seconds after the gun trigger is released.**
- **Do not operate with covers, panels or guards removed or open.**
- **Only qualified personnel should perform maintenance work.**

1. Turn power off at the welding power source.
2. Release the idle roll pressure arm.
3. Remove the outer wire guide by turning the knurled thumbscrews counter-clockwise to unscrew them from the feedplate.
4. Rotate the triangular lock and remove the drive rolls.

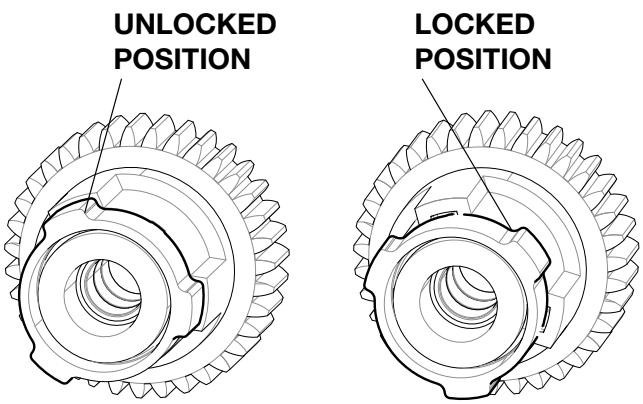

5. Remove the inner wire guide.
6. Insert the new inner wire guide, groove side out, over the two locating pins in the feedplate.
7. Install a drive roll on each hub assembly secure with the triangular lock.
8. Install the outer wire guide by aligning it with the pins and tightening the knurled thumbscrews.
9. Close the idle arm and engage the idle roll pressure arm. Adjust the pressure appropriately.

PRESSURE ARM ADJUSTMENT

⚠ WARNING

ELECTRIC SHOCK CAN KILL.

- **Turn the input power OFF at the welding power source before installation or changing drive rolls and/or guides.**
- **Do not touch electrically live parts.**
- **When inching with the gun trigger, electrode and drive mechanism are "hot" to work and ground and could remain energized several seconds after the gun trigger is released.**
- **Do not operate with covers, panels or guards removed or open.**
- **Only qualified personnel should perform maintenance work.**

The pressure arm controls the amount of force the drive rolls exert on the wire. Proper adjustment of the pressure arm gives the best welding performance.

Set the pressure arm as follows:

FIGURE A.3

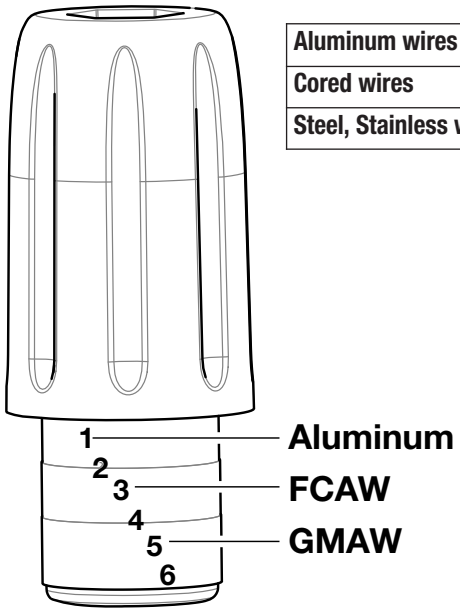

Aluminum wires	between 1 and 3
Cored wires	between 3 and 4
Steel, Stainless wires	between 4 and 6

GUN CONNECTION

⚠ WARNING

ELECTRIC SHOCK CAN KILL.

- **Turn the input power OFF at the welding power source before installation or changing drive rolls and/or guides.**
- **Do not touch electrically live parts.**
- **When inching with the gun trigger, electrode and drive mechanism are "hot" to work and ground and could remain energized several seconds after the gun trigger is released.**
- **Do not operate with covers, panels or guards removed or open.**
- **Only qualified personnel should perform maintenance work.**

The LN-25X™ comes with a K1500-2 gun adapter installed. To install a gun,

1. Turn power OFF.
2. Remove the thumb screw.
3. Push the gun the completely into the gun bushing.
4. Secure the gun in place with the thumb screw.
5. Connect the trigger cable from the gun to the trigger connector on the front of the feeder.

Note: Not all gun bushings require the use of the thumb screw.

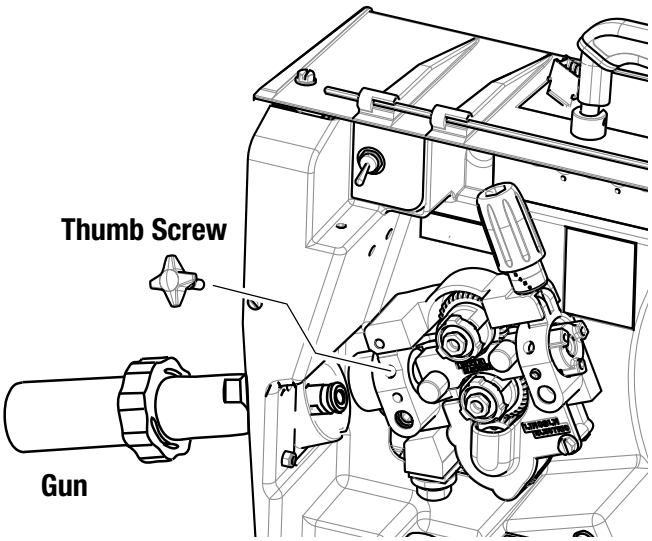

SHIELDING GAS CONNECTION

⚠ WARNING

CYLINDER may explode if damaged.

- **Keep cylinder upright and chained to support.**
- **Keep cylinder away from areas where it may be damaged.**
- **Never lift welder with cylinder attached.**
- **Never allow welding electrode to touch cylinder.**
- **Keep cylinder away from welding or other live electrical circuits.**

Build up of shielding gas may harm health or kill.

- **Shut off shielding gas supply when not in use.**
- **See American National Standard Z-49.1, "Safety in Welding and Cutting" Published by the American Welding Society.**

Maximum inlet pressure is 100 psi. (6.9 bar.)

Install the shielding gas supply as follows:

1. Secure the cylinder to prevent it from falling.
2. Remove the cylinder cap. Inspect the cylinder valves and regulator for damaged threads, dirt, dust, oil or grease. Remove dust and dirt with a clean cloth. **DO NOT ATTACH THE REGULATOR IF OIL, GREASE OR DAMAGE IS PRESENT!** Inform your gas supplier of this condition. Oil or grease in the presence of high pressure oxygen is explosive.
3. Stand to one side away from the outlet and open the cylinder valve for an instant. This blows away any dust or dirt which may have accumulated in the valve outlet.
4. Attach the flow regulator to the cylinder valve and tighten the union nut(s) securely with a wrench. Note: if connecting to 100% CO_2 cylinder, insert regulator adapter between regulator and cylinder valve. If adapter is equipped with a plastic washer, be sure it is seated for connection to the CO_2 cylinder.
5. Attach one end of the inlet hose to the outlet fitting of the flow regulator. Attach the other end to the welding system shielding gas inlet. Tighten the union nuts with a wrench.
6. Before opening the cylinder valve, turn the regulator adjusting knob counterclockwise until the adjusting spring pressure is released.
7. Standing to one side, open the cylinder valve slowly a fraction of a turn. When the cylinder pressure gage stops moving, open the valve fully.
8. The flow regulator is adjustable. Adjust it to the flow rate recommended for the procedure and process being used before making a weld.

OPERATION

SAFETY PRECAUTIONS

⚠ WARNING

ELECTRIC SHOCK can kill.

- **Do not touch electrically live parts or electrode with skin or wet clothing.**
- **Insulate yourself from work and ground.**
- **Always wear dry insulating gloves.**

FUMES AND GASES can be dangerous.

- **Keep your head out of fumes.**
- **Use ventilation or exhaust to remove fumes from breathing zone.**

ARC RAYS can burn.

- **Wear eye, ear and body protection.**

Observe additional Safety Guidelines detailed in the beginning of this manual.

The serviceability of a product or structure utilizing the LN-25X™ wirefeeder is and must be the sole responsibility of the builder/user. Many variables beyond the control of The Lincoln Electric Company affect the results obtained in using the LN-25X™ wirefeeder. These variables include, but are not limited to, welding procedure, plate chemistry and temperature, weldment design, fabrication methods and service requirements. The available range of the LN-25X™ wirefeeder may not be suitable for all applications, and the builder/user is and must be solely responsible for welding settings.

POWER-UP SEQUENCE

If the gun trigger is activated during power up, the feeder will not operate until the gun trigger is released.

GRAPHIC SYMBOLS THAT APPEAR ON THIS MACHINE OR IN THIS MANUAL

WARNING OR CAUTION

INPUT VOLTAGE

OUTPUT ON

GAS PURGE

HIGH TEMPERATURE

READ INSTRUCTION MANUAL

PROTECTIVE GROUND

GAS INPUT

SINGLE PHASE

CASE FRONT CONTROLS

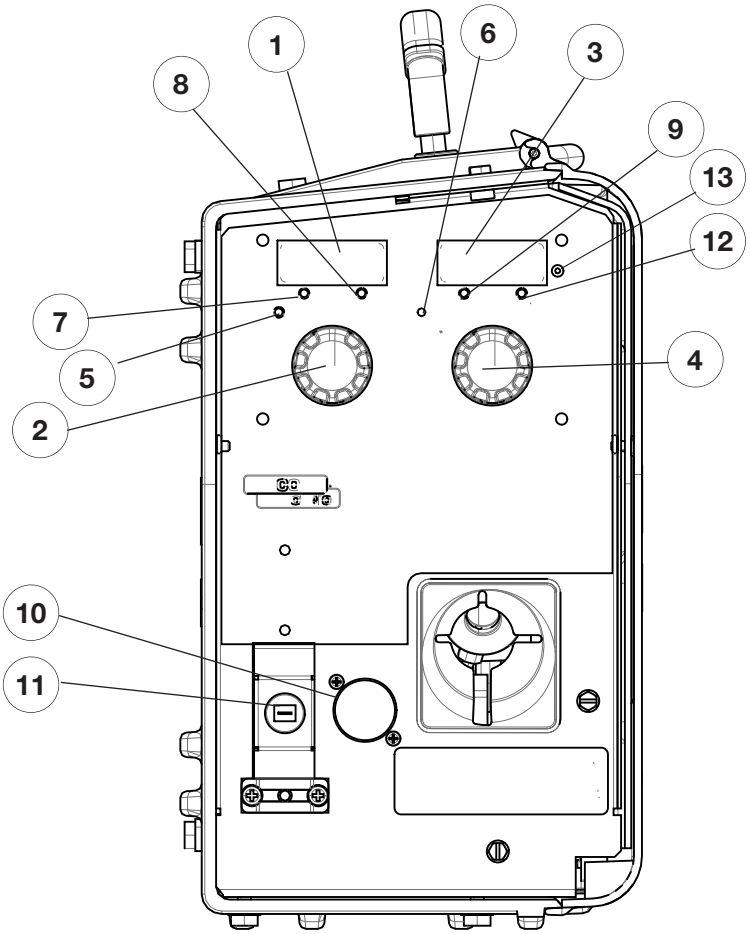

Item	Description
1	Wire Feed Speed Digital Display
2	Wire Feed Speed Knob
3	Voltage Digital Display
4	Voltage Knob
5	Thermal LED
6	CrossLinc™ LED
7	Wire Feed Speed LED
8	Amperage LED
9	Voltage LED
10	5 Pin Gun Trigger Connector
11	Work Sense Lead
12	True Voltage Technology™ (TVT)
13	Setup Menu Access

Wire Feed Speed Digital Display

The LN-25X™ has a digital display that shows the wire feed speed. This display is also capable of displaying amperage and the setup menu.

Wire Feed Speed Knob

Use the Wire Feed Speed Knob to set the rate of wire feed speed. The wire feed speed will be displayed on the Wire Feed Speed Digital Display. During CV operation, the wire feed speed will remain a constant value, independent of arc voltage changes, as along as the arc voltage does not drop below the values per the following table.

CV Operation		
Minimum Arc Volts	**Maximum WFS (Standard Torque)**	**Maximum WFS (Extra Torque)**
15 V	400	220
17 V	450	250
21 V	570	300
24 V	650	350
27 V	700	400

Voltage Digital Display

The LN-25X™ has a digital display that shows the voltage between electrode and work. This display is also capable of displaying the setup menu.

Voltage Knob

Use the Voltage Knob to set the voltage when connected to a CrossLinc™ Power Source, otherwise the display will show dashes. The voltage will be displayed on the Voltage Digital Display. During CV operation, the voltage will remain stable while welding.

Thermal LED, Motor Overload

The thermal light illuminates when the wire drive motor draws too much current. If the thermal light illuminates, the wire drive will automatically shutdown for up to 30 seconds to allow the motor to cool. To start welding again, release the gun trigger, inspect the gun cable, liner (and conduit). Clean and make repairs as necessary. Start welding again when the problem has been safely resolved.

For best results, keep the gun cable and conduit as straight as possible. Perform regular maintenance and cleaning on the gun liner, conduit and gun. Always use quality electrode, such as L-50 or L-56 from Lincoln Electric.

Dual Procedure

The Dual Procedure feature can be turned on in the hidden menu and accessed with a dual procedure gun or dual procedure switch in combination with a CrossLinc compatible power source. Dual Procedure allows you to quickly switch between any two WFS and V combinations saved in Procedures A and B and accessed with the dual procedure gun switch.

NOTE: When not using a CrossLinc compatible power source, remote voltage control is not available and therefore only a lower wire feed speed would result from an attempted change in dual procedure.

True Voltage Technology (TVT)

When the TVT LED is illuminated, the CrossLinc™ enabled power source is compensating for the voltage dropped across the electrode in between the power source and LN-25X™.

CrossLinc™ LED

The CrossLinc™ LED displays whether the feeder is connected to the power source. When the feeder has successfully connected to the power source, the LED will illuminate.

Wire Feed Speed LED and Amperage LED

The Wire Feed Speed and Amperage LEDs will communicate what is being displayed on the Wire Feed Speed Digital Display. When the Wire Feed Speed LED is illuminated, wire feed speed is being displayed. When the Amperage LED is illuminated, amperage is being displayed.

Voltage LED

The Voltage LED will be illuminated when the Voltage Digital Display is displaying actual voltage or when its displaying with a CrossLinc™ connection.

Five Pin Gun Trigger Connector

The 5 Pin Gun Trigger Connector is where the trigger that is attached to the welding gun is connected. This will actuate the welding current when the trigger is pulled.

Work Sense Lead

The Work Sense Lead is used to power the feeder and communicate with the power source. Connecting the Work Sense Lead is critical for the operation of the feeder, as it will not power up if it is disconnected.

DIGITAL METER OPERATION

CrossLinc

When connected to a power source that supports CrossLinc™, the CrossLinc™ LED will be illuminated when a connection is made between the feeder and power source.

When connected to a power source that does not support CrossLinc™, the CrossLinc™ LED will not be illuminated.

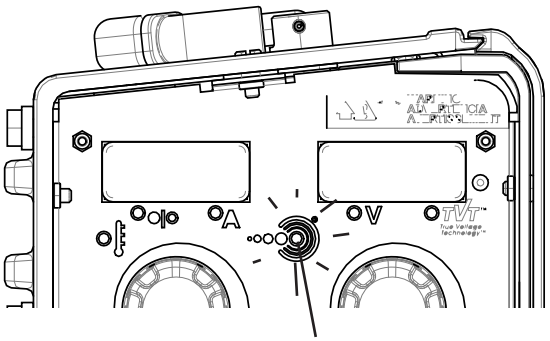

Idle

The left display shows the preset wire feed speed. The right display shows the preset voltage when it is connected to a power source that supports CrossLinc™ and CrossLinc communication is activated.. It will display dashes when connected to a power source that does not support CrossLinc™, meaning that voltage can not be preset from the feeder and must be set at the power source.

When connected to a power source with CrossLinc™

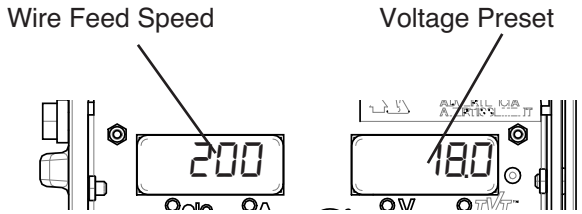

When connected to a power source without CrossLinc™

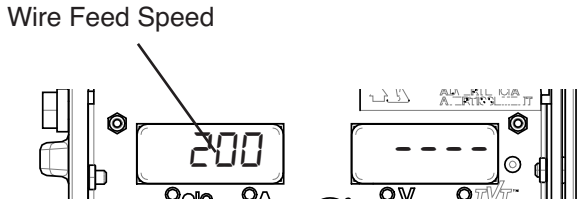

During Welding

The value in the left display will be either amps or actual wire feed speed, depending upon the selection chosen in the set-up menu. The corresponding LED below the display will light. Note that actual WFS may not match preset WFS, if welding at low voltages with high wire feed speeds. The right display shows the arc voltage. If the wire feeder is connected for electrode negative welding, then the voltage display shows a minus sign.

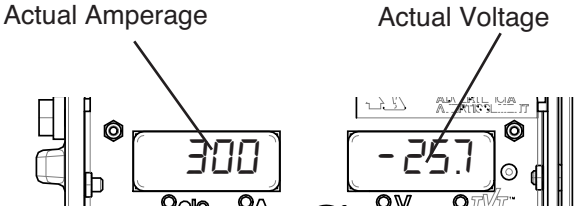

After Welding

The display continues to hold the value of the amperage or WFS and arc voltage for ten seconds after welding stops. The amperage or WFS and voltage displays flash. For 10 sec or until the WFS or V knobs are rotated.

SETUP MENU OPERATION

The LN-25X™ setup menu is accessed through the hidden setup menu push button that is located below a small hole just right of the right 4 digit display.

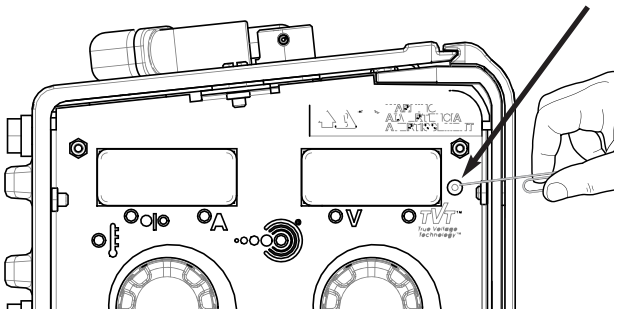

To enter the setup menu, use a paper clip to quickly press and release the small button located to the right of the voltage display on the front of the LN-25X™.

The setup menu settings (in order) are:

- Wire feed speed units (metric or English)
- Preflow time
- Run in wire feed speed
- Burnback time
- Postflow time
- Display of actual wire feed speed or arc current
- Dual procedure
- Arc hours display off/total/user
- After weld display hold time
- True Voltage Technology (TVT) enable/disable/reset
- CrossLinc™ enable/disable
- CC or CV power source
- Wire feed speed calibration
- Arc voltage display calibration
- Arc current display calibration

The left display will show the menu item, and the right display will show the set value.

The left encoder is used to select the setup menu item to be changed. The right encoder will be used to change the set value.

While in the setup menu, there are 3 ways to exit the menu and return to showing preset settings on the displays.

1. A quick press and release of the setup button.
2. A quick gun trigger closure and release.
3. 30 seconds of inactivity while in the setup menu.

FACTORY RESET

Pressing and holding the hidden button for about 5 seconds enters the user into a special menu that displays the firmware version for both the motor control board and the user interface. While displaying the firmware versions after the hidden button has been released, an additional press and release of the hidden button prompts the user to choose whether they want to restore factory default settings. The right encoder can then be used to select whether an additional press of the hidden button will reset the feeder to the factory default settings.

Setup Menu Item	Left Display	Right Display	Factory Default	Description
Wire feed speed units		US / Euro	**US***	Changes the display of wire feed speed between inches per minute (US) and meters per minute (Euro)
Preflow time	PrE / FLo	OFF / 0.10 - 10.0	**OFF**	The preflow timer range is OFF to 10 seconds. Preflow time is the time delay from when the trigger is pulled to when the wire starts to feed and is energized. Preflow is used to purge the welding gun with shielding gas and helps to minimize porosity at the start of the weld.
Run in wire feed speed	run	OFF/ 10 / 20/ 30 / 40/ 50	**OFF**	"Run-in" refers to the wire feed speed during the time from when the trigger is pulled to when an arc is struck. The Run-In range is Off, 10%,20%,30%,40%,50% of the set welding wire feed speed.When a number is displayed, the Run-in wire feed speed is that percentage of the welding wire feed speed until an arc is struck. When Run-in is "OFF", the wire feed speed is the same as the welding wire feed speed. Turn Run-In "OFF" for fast, crisp starts, especially when running with .035 or .045 (0.9 or 1.2mm) solid steel wires at high wire feed speeds.
Burnback time	burn / bAC	OFF / 0.030 - 0.250	**OFF**	The burnback timer controls the additional amount of time the power source output remains ON after the wire drive has stopped feeding wire. The range for Burnback is Off, 0.10-10sec. Burnback adjustment prevents the wire from sticking to the weld at the end of a weld and helps to condition the wire for the next weld.
Postflow time	POSt / FLo	OFF / 0.10 - 10.0	**OFF**	Postflow is the time from when the power source output turns off until the postflow timer expires. The range for Postflow gas time is Off, .1-10sec. Use postflow to protect the weld while the weld cools.
Display of actual wire feed speed or arc current	dISP	Curr / FEEd	**Curr**	The left display can show either amperage (CUrr) or actual WFS (FEEd) during welding.
Dual Procedure	duAL	A-b / 10-90 Pct	**83 Pct**	When "A-b" is selected, dual procedure is fully independent for Procedure A and Procedure B for both set wire feed speed and set voltage. Procedure B is selected by closing the dual procedure switch. These independent settings for dual procedure can only be changed while the welding arc is not present. The setting of voltage requires a CrossLinc™ connection between the power source and the LN-25X. After changing the switch position, there may be a short delay for the new setting to be recognized by the power source. When a "Pct"/number is selected, wire feed speed only is affected by dual procedure. Closing the dual procedure switch results in the set wire feed speed being the set percentage of the displayed set wire feed speed. This wire feed speed change can be done at all times including during the weld, and it does not affect the set voltage.
Arc hours display on/off	hrS	OFF/totL/uSEr	**OFF**	When on, the cumulative arc hours and arc minutes will be displayed at power on. Total (non-resettable) arc hours or user (resettable) arc hours can be displayed. To reset the user arc hours, depress the gas purge button when "uSEr" is displayed.

***K3519-2 has a factory default of EURO**

Setup Menu Item	Left Display	Right Display	Factory Default	Description
After weld display hold time	hoLd	5 or 300 / SEC	**5**	The display of the actual wire feed speed or amperage and voltage after welding has stopped will be held for either 5 seconds or 300 seconds.
True Voltage Technology (TVT) enable/disable	tUt	OFF/On/rSEt	**On**	Turns TVT functionality on or off. Under certain conditions (i.e, changing from long cable lengths to short cable lengths) it might be necessary to reset the saved TVT calculated value. To perform this reset, turn the right knob to the "rSEt" position and depress the hidden setup button. The TVT led will blink red and green for two seconds to indicate a reset.
CrossLinc™ enable/disable	CroS / LInC	OFF / On	**On**	Turns CrossLinc™ functionality on or off. TVT is operational only when CrossLinc™ is on.
CC or CV power source		CV / CC	**CV**	By default, CrossLinc is active and it is assumed the Activ8X is being used with a CV output power source. In this case, voltage will be presettable at the feeder and WFS will be the actual WFS. When used with a CC output only power source, voltage will not be presettable at the feeder and WFS will be a function of the WFS setting and the actual welding voltage. (refer to Fig B.4)
Wire feed speed calibration	SPd / CAL	0.95 - 1.05	**1**	This is used to calibrate the wfs meter to a known calibrated wfs meter. To calibrate the wire feed speed, before entering the set-up menu: • Set the display to the desired wire feed speed (example: 400 inches per minute) • Measure the actual wire feed speed (example: 405 inches per minute) While in the set-up menu, adjust the calibration factor as follows: Actual WFS / Set WFS = Calibration factor Example: 405 / 400 = 1.01
Arc voltage display calibration	UOL / CAL	0.90 - 1.10	**1**	This is used to calibrate the voltage meter. To calibrate the arc voltage display, before entering the setup menu: • Determine the ratio of the actual arc voltage and the arc voltage displayed. While in the setup menu, adjust the calibration factor as follows: Actual arc voltage / displayed arc voltage = calibration factor Example: 20.0 / 20.5 = 0.97
Arc current display calibration	Cur / CAL	0.90 - 1.10	**1**	This is used to calibrate the current meter to a know calibrated voltmeter. To calibrate the arc current display, before entering the setup menu: • Determine the ratio of the actual arc current displayed by the power source and the current displayed by the wire feeder. While in the setup menu, adjust the calibration factor as follows: Power source displayed arc current / Wire feeder displayed arc current = calibration factor Example: 205 / 200 = 1.03

CONSTANT CURRENT OPERATION
Setting Wire Feed Speed in CC mode

When Across the Arc models are operated with CC power sources, the wire feed speed changes as the arc voltage changes. When the arc voltage increases, the wire feed speed will increase; and when the arc voltage decreases, the wire feed speed will decrease.

To preset the wire feed speed on CC power sources:

1. Set the LN-25X™ to "CC" in the setup menu.
2. Refer to the Figure B.4 graph to determine CC setting of the wire feed speed knob. Select the horizontal line representing the Desired Wire Feed Speed. (See Figure B.4 arrow for 375 in/min.)
3. Select the diagonal line representing the Arc Volts. (See Figure B.4 for 29 volts.)
4. Determine the vertical line representing the CC Wire Feed Speed setting where the above two lines cross. (See Figure B.4 arrow line for 450.) Set the LN-25X™ wire feed speed knob to this value.

$$\text{CC WFS dial setting} = \frac{\text{desired WFS} \times 35}{\text{Arc Volts}}$$

Example:

$$= \frac{\text{375 in/min. (Horizontal Line)} \times 35}{\text{29 Arc Volts (Diagonal Line)}}$$

= 452.5 (Vertical Line) **Use 450** setting (See Figure B.4)

FIGURE B.4

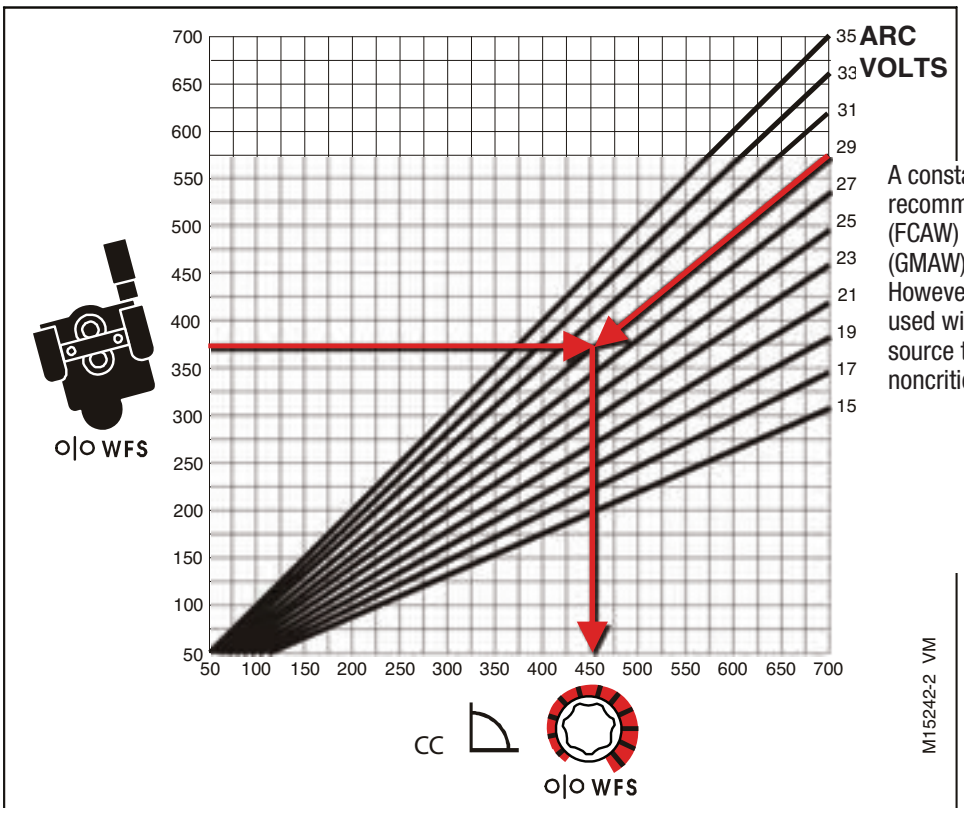

A constant voltage (CV) power source is recommended for flux-cored arc welding. (FCAW) and gas metal arc welding (GMAW) to obtain code quality results. However, this wire feeder may also be used with a constant current (CC) power source to obtain passable results for noncritical quality applications.

(Actual wire feed speed)

CONSTANT CURRENT OPERATION

⚠ CAUTION

Lincoln Electric does NOT recommend constant current semiautomatic welding for applications which need to meet specified weld metal chemical or mechanical property requirements or weld quality requirements.

Most semiautomatic welding processes perform better using constant voltage power sources.

Welding codes usually do not address the power source selection or specifically, whether the welding process is to be operated in the constant voltage or constant current mode. Instead, codes typically specify limitations on the current, voltage, heat input and preheat temperature based on the material to be welded. The intention is to assure that proper weld material properties will develop.

Welding is sometimes performed using constant current power sources. The operation can be more convenient because it may allow the use of an existing stick (SMAW) power source and the power source can be placed at a distant location without any provision for adjusting the output settings.

For constant current operation, the power source is set to deliver the specified current. The power source regulates this current regardless of changes in the welding circuit, including cable length, electrode diameter, wire feed speed, contact tip to work distance, etc.

Changes in the wire feed speed (WFS) or contact tip to work distance (CTWD) affect the arc voltage when constant current power sources are used. Lowering the wire feed speed raises the voltage, raising the wire feed speed lowers the voltage. Lengthening the contact tip to work distance raises the voltage, shortening the contact tip to work distance lowers the voltage.

If the contact tip to work distance is properly maintained, a satisfactory operating voltage range may be achieved, and a sound weld may result. However, when a welder uses a longer contact tip to work distance, an arc-sensing wire feeder compensates by increasing the wire feed speed to regulate the voltage. Even if the voltage and current remain unchanged, the increased wire feed speed may result in a deposition rate well beyond the specified range of the electrode. Under these conditions, the specified weld metal properties may not be achieved.

Constant voltage power sources deliver large current surges to stabilize the arc when the electrode is shorted or the arc length is very short. However, a constant current power source does not provide such a response to stabilize the arc. It may be difficult to achieve required weld metal properties, or to achieve the required quality of welds needed to pass nondestructive tests, when such welds are made under constant current operation.

For these reasons, Lincoln Electric does NOT recommend constant current semiautomatic welding for applications which need to meet specified weld metal chemical or mechanical property requirements or weld quality requirements.

FIGURE B.5

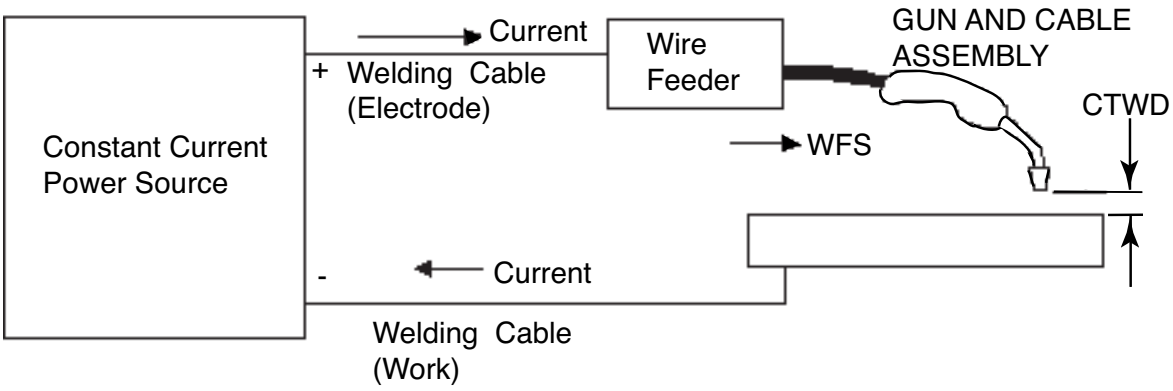

INTERNAL CONTROLS

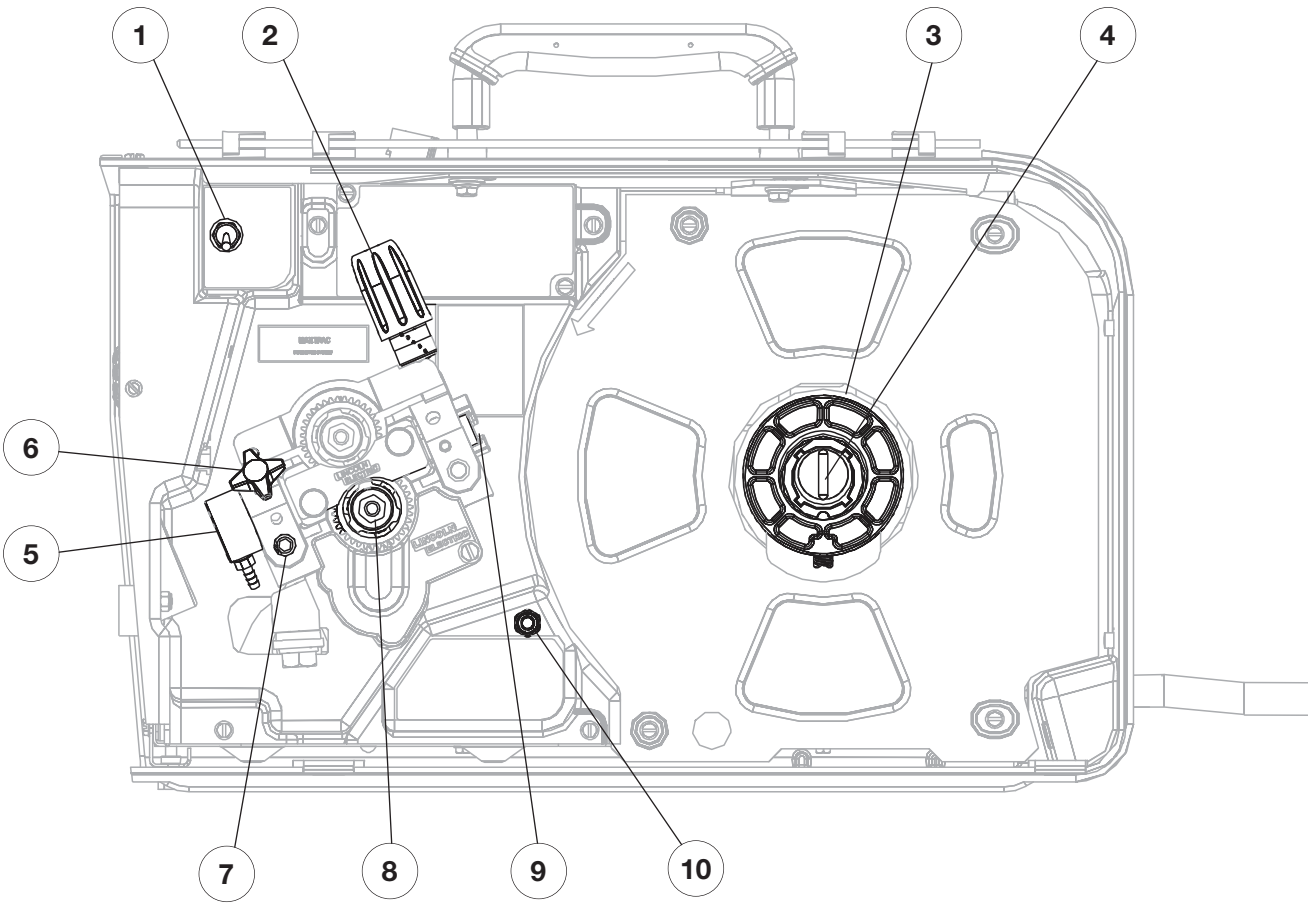

Item	Description
1	2 Step/Trigger Interlock Switch (not present on K2613-3 and K2613-4)
2	Pressure Adjustment Knob
3	Spool Retainer
4	Spindle Brake
5	Gun Bushing
6	Thumb Screw
7	Socket Head Cap Screw for Gun Bushing
8	Drive Hubs
9	Inlet Wire Guide
10	Cold Feed Pushbutton

Internal Controls Description

2 Step - Trigger Interlock Switch

The 2 Step - Trigger Interlock switch changes the function of the gun trigger. 2 Step trigger operation turns welding on and off in direct response to the trigger. Trigger Interlock operation allows welding to continue when the trigger is released for comfort on long welds.

Place the toggle switch in the DOWN position for 2 Step operation or in the UP position for Trigger Interlock operation.

2 Step Trigger

2 Step trigger operation is the most common. When the gun trigger is pulled, the welding power source energizes the electrode output and the wire feeder feeds wire for welding. The power source and wire feeder continue welding until the trigger is released.

Trigger Interlock

Trigger Interlock operation provides for operator comfort when making long welds. When the gun trigger is first pulled, the welding power source energizes the output and the wire feeder feeds wire for welding. The gun trigger is then released while the weld is made. To stop welding, the gun trigger is pulled again, and when it is released the welding power source output turns off and the wire feeder stops feeding wire.

Caution: If the arc goes out while welding with trigger interlock operation, the electrode output from the welding power source remains energized and the wire feeder will continue to feed wire until the gun trigger is again pulled and then released.

Cold Feed Pushbutton

When cold feeding, the wire drive will feed electrode but neither the power source nor the gas solenoid will be energized. Adjust the speed of cold feeding by rotating the WFS knob. Cold feeding, or "cold inching" the electrode is useful for threading the electrode through the gun.

REAR CONTROLS

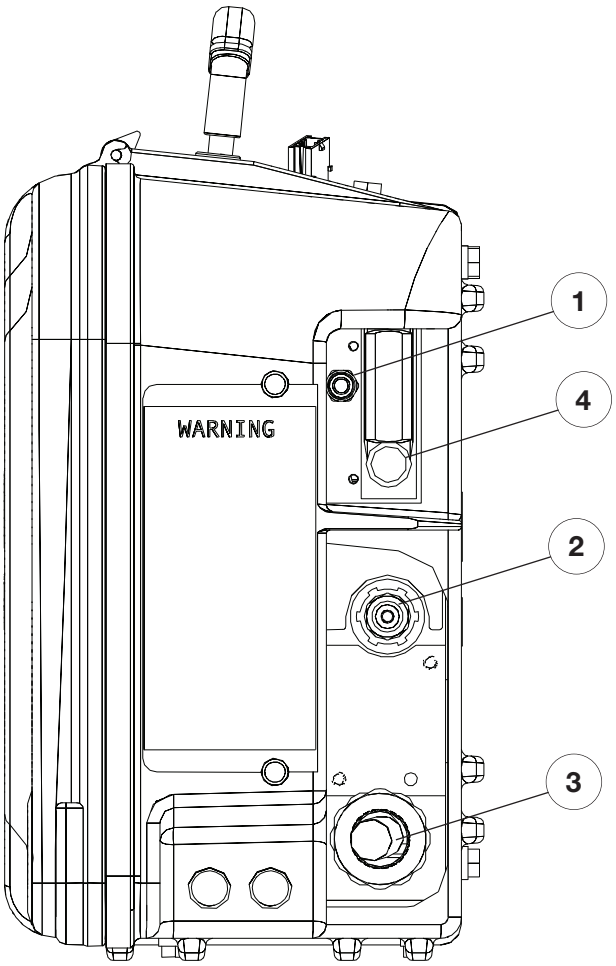

Item	Description
1	Gas Purge Pushbutton
2	Shielding Gas Inlet
3	Electrode Lead
4	Gas Flowmeter*

*Gas Flow Meter only on K4267-3 and K4267-4

Gas Purge Pushbutton

The gas solenoid valve will energize but neither the power source output nor the drive motor will be turned on. The Gas Purge switch is useful for setting the proper flow rate of shielding gas. Flow meters should always be adjusted while the shielding gas is flowing.

OPTIONS/ACCESSORIES

The following options/accessories are available for your LN-25X™ from your local Lincoln Electric Distributor.

DRIVE ROLL KITS, 2 ROLL DRIVE			
Steel Wire Drive Roll Kits			
KP1696-030S	.023-.030 (0.6-0.8MM)	INCLUDES: 2 **V GROOVE** DRIVE ROLLS AND INNER WIRE GUIDE.	
KP1696-035S	.035 (0.9MM)		
KP1696-045S	.045 (1.2MM)		
KP1696-052S	.052 (1.4MM)		
KP1696-1/16S	1/16 (1.6MM)		
KP1696-1	.035,.045 (0.9, 1.2MM)		
KP1696-2	.040 (1.0MM)		
Cored Wire Drive Roll Kits			
KP1697-035C	.030-.035" (0.8-0.9MM)	INCLUDES: 2 **KNURLED** DRIVE ROLLS AND INNER WIRE GUIDE.	
KP1697-045C	.040-.045" (1.0-1.2MM)		
KP1697-052C	.052" (1.4MM)		
KP1697-1/16C	1/16" (1.6MM)		
KP1697-068	.068-.072" (1.7-1.8MM)		
KP1697-5/64	5/64" (2.0MM)		
KP1697-3/32 (EXTRA TORQUE MODELS	3/32”(2.4MM)		
Aluminum Wire Drive Roll Kits			
KP1695-035A	.035" (0.9 MM)	INCLUDES: 2 POLISHED **U GROOVE** DRIVE ROLLS, OUTER WIRE GUIDE AND INNER WIRE GUIDE.	
KP1695-040A	.040" (1.0MM)		
KP1695-3/64A	3/64" (1.2MM)		
KP1695-1/16A	1/16" (1.6MM)		

Optional Kits & Accessories

K2596-2

Polycarbonate Portable Feeder Case

Replace a damaged case without replacing the entire unit.

K1796-xx

AWG 1/0 Co-Axial Power Cable

Includes: 1/0 Coaxial weld cable of length "xx". Ends of the weld cable have lug connections. Use for Pulse welding.

K2593-xx

AWG #1 Coaxial Power Cable

Includes: #1 Coaxial weld cable of length "xx". Ends of the weld cable have lug connections. Use for Pulse welding.

K1803-1

Work and Wire Feeder 2/0 Weld Cable Package

Includes Twist Mate™ connectors, work clamp, 15 ft. (4.5 m) work cable and 10 ft. (3.0 m) electrode cable. Rated 350 amps, 60% duty cycle.

K1803-3

WELD CABLE PACKAGE - WORK LEAD - TM & GC500 GROUND CLAMP (2/0, 350A, 60%) - 15 FT (15.3 M)

Includes Twist Mate™ (Dinse) connector, ground clamp, 15 ft. (4.5 m) 2/0 cable. Rated 350 amps, 60% duty cycle.

K1840-xx

Weld Power Cable, Twist-Mate to Lug

Includes: Twist-Mate to Lug, 1/0 cable of length "xx".

1/0, 350A, 60% duty cycle.

K1842-10

Weld Power Cable, Lug to Lug

Includes: Lug to Lug, 3/0 Cable of length "xx" for lengths up to 60' (18.3m). Lug to Lug, 4/0 Cable of length "xx" for lengths greater than 60' (18.3m).

K910-1 & K910-2

Work Clamp

Jaws open full 2-1/2 inches (63 mm). Welding cable lug bolts directly to the work clamp. 60% duty cycle. Select K910-1 for 300 Amp applications. K910-2 for 500 Amp.

K1500-1

Gun Receiver Bushing

(for guns with K466-1 Lincoln gun connectors; Innershield and Subarc guns)

Includes: Gun receiver bushing, set screw and hex key wrench.

K1500-2

Gun Receiver Bushing

(for guns with K466-2, K466-10 Lincoln gun connectors; Magnum 200/300/400 guns and compatible with Tweco® #2-#4)

Includes: Gun receiver bushing with hose nipple, set screw and hex key wrench.

K1500-3

Gun Receiver Bushing

for guns with K613-7 Lincoln gun connectors; Magnum 550 guns and compatible with Tweco® #5)

Includes: Gun receiver bushing with hose nipple, set screw and hex key wrench.

K1500-4

Gun Receiver Bushing

For gun with K466-3 Lincoln gun connectors; compatible with Miller® guns.)

Includes: Gun receiver bushing with hose nipple, set screw and hex key wrench.

K1500-5

Gun Receiver Bushing

(compatible with Oxo® guns.)

Includes: Gun receiver bushing with hose nipple, 4 guide tubes, set screw and hex key wrench.

K489-7

Gun Receiver Bushing

for Lincoln Fast-Mate guns.)

Includes: Gun receiver bushing with trigger connector.

K435

Spindle Adapter,

for mounting 14 lb. (6.4 kg) Innershield Coils on 2 in (51 mm) spindles.

Includes: Spindle Adapter made from 2 coil retainers. (Electrode not included.)

K468

Spindle Adapter,

for mounting 8in (203mm) diameter spools on 2 in (51 mm) spindles.

Includes: 2 Spindle Adapters, one for 2” wide spools and the other for 3” wide spools.

K586-1

Deluxe Adjustable Gas Regulator

Includes: Deluxe Gas Regulator for Mixed Gases, Adapter for CO2 and 10' (3.0m) Hose.

K283

Wire Feed Speed Meter

Includes: A wire feed speed meter with digital display.

MAINTENANCE

⚠ WARNING

ELECTRIC SHOCK CAN KILL.

- **Turn the input power OFF at the welding power source before installation or changing drive rolls and/or guides.**
- **Do not touch electrically live parts.**
- **When inching with the gun trigger, electrode and drive mechanism are "hot" to work and ground and could remain energized several seconds after the gun trigger is released.**
- **Do not operate with covers, panels or guards removed or open.**
- **Only qualified personnel should perform maintenance work.**

ROUTINE MAINTENANCE

- Check weld cables and gas hoses for cuts.
- Clean and tighten all weld terminals.

PERIODIC MAINTENANCE

- Clean the drive rolls and inner wire guide and replace if worn.
- Blow out or vacuum the inside of the feeder.

Flow Meter Validation

Tools required:

- Flow meter reference standard.
- Constant voltage DC welding power source (DC- 400, V-350, CV-400 or equivalent).

To verify the flow meter accuracy:

1. Turn power OFF.
2. Connect the LN-25X™to the constant voltage DC welding power source. The work lead of the LN-25X™must be connected to the work terminal of the power source.
3. Connect a supply of CO2 to the wire feeder. Do not exceed the maximum inlet pressure of the wire feeder.
4. Disconnect the shielding gas hose that connects to the gun bushing.
5. Connect the shielding gas hose to flow meter reference standard.
6. Orient the LN-25X™in a vertical position.
7. Turn power ON.
8. Adjust the flow meter on the LN-25X™to 40 scfh while pressing the GAS PURGE button.
9. Measure the gas flow with the calibrated flow meter while pressing the GAS PURGE button.
10. The measured flow rate should be between 35 and 45 scfh. The LN-25X™flow meter cannot be calibrated. If the flow meter reads incorrectly, check for leaks or kinks in the gas hose. Replace the flow meter if necessary.

TROUBLESHOOTING

HOW TO USE TROUBLESHOOTING GUIDE

⚠ WARNING

Service and Repair should only be performed by Lincoln Electric Factory Trained Personnel. Unauthorized repairs performed on this equipment may result in danger to the technician and machine operator and will invalidate your factory warranty. For your safety and to avoid Electrical Shock, please observe all safety notes and precautions detailed throughout this manual.

This Troubleshooting Guide is provided to help you locate and repair possible machine malfunctions. Simply follow the three-step procedure listed below.

Step 1. LOCATE PROBLEM (SYMPTOM).
Look under the column labeled "PROBLEM (SYMPOMS)." This column describes possible symptoms that the machine may exhibit. Find the listing that best describes the symptom that the machine is exhibiting.

Step 2. POSSIBLE CAUSE.
The second column labeled "POSSIBLE CAUSE" lists the obvious external possibilities that may contribute to the machine symptom.

Step 3. RECOMMENDED COURSE OF ACTION
This column provides a course of action for the Possible Cause, generally it states to contact you local Lincoln Authorized Field Service Facility.

If you do not understand or are unable to perform the Recommended Course of Action safely, contact you local Lincoln Authorized Field Service Facility.

⚠ CAUTION

If for any reason you do not understand the test procedures or are unable to perform the tests/repairs safely, contact your **Local Lincoln Authorized Field Service Facility** for technical troubleshooting assistance before you proceed.

Observe all Safety Guidelines detailed throughout this manual

PROBLEM	POSSIBLE CAUSE	RECOMMENDED COURSE OF ACTION
Err 81 Motor overload, long term	The wire drive motor has overheated.	1. Check that the electrode slides easily through the gun and cable. 2. Remove tight bends from the gun and cable. 3. Check that the spindle brake is not too tight. 4. Verify a high quality electrode is being used. 5. Wait for the error to reset and the motor to cool (approximately 1 minute).
Err 82 Motor overload, short term	TThe wire drive motor current draw has exceeded limits, usually because the motor is in a locked rotor state.	1. Check that motor can turn freely when idle arm is open. 2. Verify that the gears are free of debris and dirt.
Output Problems		
The feeder does power up - no voltage, no cold feed.	1. The work sense lead is disconnected or is a poor electrical connection. (Across the arc models) 2. The power source is OFF.	1. Connect the work sense lead to the work in a location free of dirt, rust and paint. 2. Turn ON the power source.
The wire feeder power up but there is no output when the trigger is pulled. The shielding gas is flowing and the drive rolls turn	1. The contactor coil connections are loose. 2. The contactor has failed.	1. Verify the contactor coil connections. 2. Replace the contactor.
No shielding gas.	1. The gas supply is OFF or empty. 2. The gas hose is cut or crushed 3. The flow meter valve is closed. 4. Dirt or debris is in the solenoid. 5. There is a loose solenoid connection. 6. The solenoid has failed.	1. Verify the gas supply is ON and flowing. 2. Route the gas hose so it avoids sharp corners and make sure nothing is on top of it. Repair or replace damaged hoses. 3. Open the flow meter valve. 4. Apply filtered shop at 80psi to the solenoid to remove dirt. 5. Remove the cover and check that all connections are in good condition.
Inconsistent wire feeding or wire not feeding but drive rolls turning.	1. The gun cable is kinked and/or twisted 2. The wire is jammed in the gun and cable. 3. The gun liner is dirty or worn. 4. The electrode is rusty or dirty. 5. The contact tip is partially melted or has spatter. 6. Improper gun liner, tip, drive	1. Keep the gun cable as straight as possible. Avoid sharp corners or bends in the cable. 2. Remove the gun from the wire feeder and pull the jammed wire out of the gun and cable. 3. Blow dirt out of the liner with low pressure (40psi or less). Replace the liner if worn.

CAUTION

If for any reason you do not understand the test procedures or are unable to perform the tests/repairs safely, contact your **Local Lincoln Authorized Field Service Facility** for technical troubleshooting assistance before you proceed.

PROBLEM	POSSIBLE CAUSE	RECOMMENDED COURSE OF ACTION
Inconsistent wire feeding or wire not feeding but drive rolls turning.	6. Improper gun liner, tip, drive rolls and/or inner wire guide. 7. Incorrect tension arm pressure on the drive rolls. 8. The spindle brake is too tight. 9. Worn drive roll.	6. Verify the proper parts are installed. 7. Adjust the tension arm per the Instruction Manual. Most electrodes feed well at a tension arm setting of "3". 8. Verify the spool of wire moves with minimal effort. 9. Replace the drive rolls if worn or filled with dirt.
Wire feed speed consistently operates at the wrong value. The speed changes when the wire feed speed knob is adjusted.	1. The jumper lead for normal speed/extra torque is connected improperly. 2. The wrong gear is installed in the wire drive. 3. The brushes on the motor are worn.	1. Properly connect the normal speed/extra torque jumper. 2. Install the proper pinion gear in the wire drive. 3. Replace the motor/gearbox assembly.
The wire feed speed stuck at 200-300 in/min and there is no change when the wire feed speed knob is adjusted.	1. The tachometer is connected improperly. 2. The tachometer has failed.	1. Verify all of the tachometer leads are properly connected. 2. Replace the motor and tachometer assembly.
Variable or "hunting" arc.	1. Wrong size, worn and/or melted contact tip 2. Worn work cable or poor work connection. 3. Wrong polarity. 4. The gas nozzle is extended beyond the contact tip or the wire stickout is too long. 5. Poor gas shielding on processes requiring gas.	1. Replace the contact tip. 2. Verify all work and electrode connections are tight and that the cables are in good condition. Clean/replace as necessary. 3. Adjust polarity to the recommended procedure. Verify DIP switch #7 setting matches the electrode polarity. 4. Adjust the gas nozzle and shorten the stickout to ½ to ¾ inches. 5. Check gas flow and mixture. Remove or block sources of drafts.
When the trigger is pulled, the wire feeds slowly.	The Run-In switch is “ON”	Use the set-up Push-button to turn Run-in OFF.
Poor arc starts with sticking or "blast-offs", weld porosity, narrow and ropy looking bead.	Improper procedures or techniques.	See "Gas Metal Arc Welding Guide" (GS-100)
TVT LED is red.	1. The connected power source is unable to command a set voltage high enough to compensate for the calculated voltage drop on the weld cables. 2. TVT is unable to calculate the correct cable drop because of a large change to the weld cable length or set voltage.	1. Perform a TVT reset through the setup menu to reset the TVT calculation. A factory reset will also reset the TVT calculation. Turning TVT off does not reset the calculation. 2. Use a larger gauge of welding cable or reduce the weld cable length.

WIRING DIAGRAM - LN-25X

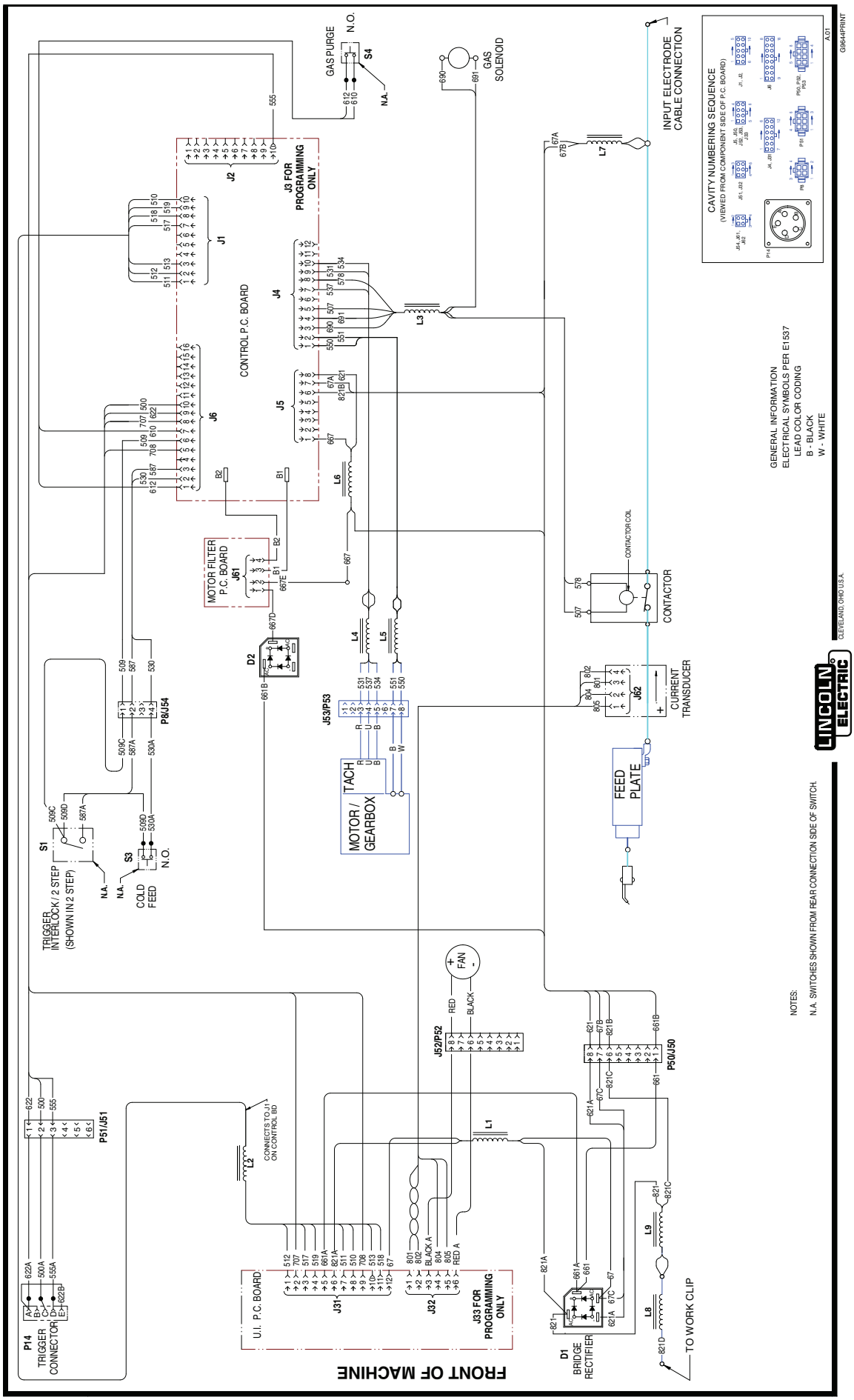

NOTE: This diagram is for reference only. It may not be accurate for all machines covered by this manual. The specific diagram for a particular code is pasted inside the machine on one of the enclosure panels. If the diagram is illegible, write to the Service Department for a replacement. Give the equipment code number.

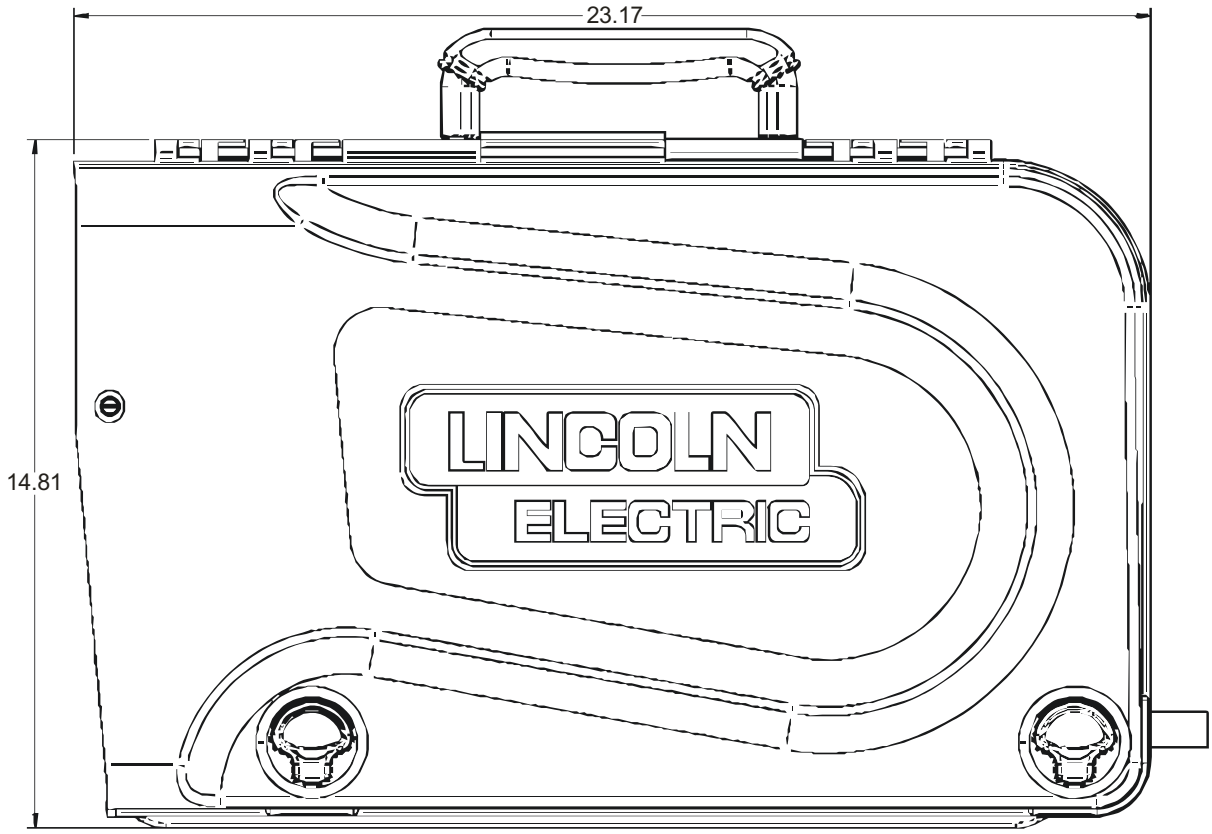
23.17
14.81
LINCOLN
ELECTRIC

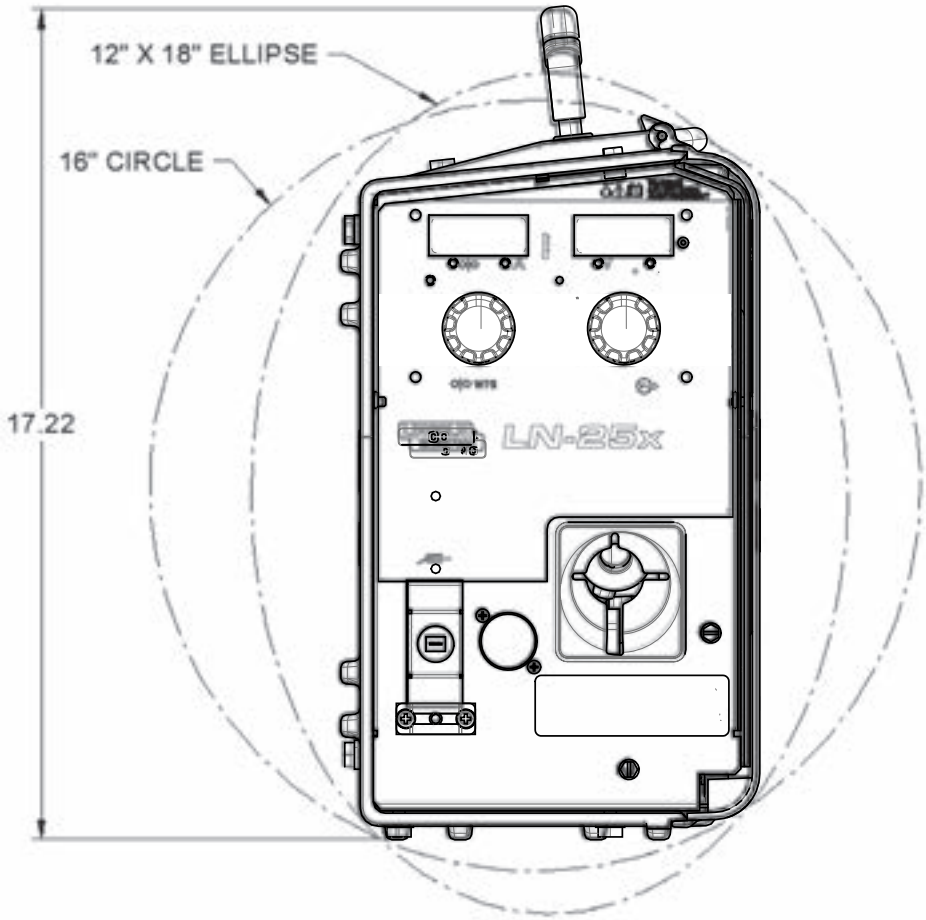
12" X 18" ELLIPSE
16" CIRCLE
17.22
LN-25x

WARNING	● Do not touch electrically live parts or electrode with skin or wet clothing. ● Insulate yourself from work and ground.	● Keep flammable materials away.	● Wear eye, ear and body protection.
Spanish **AVISO DE PRECAUCION**	● No toque las partes o los electrodos bajo carga con la piel o ropa mojada. ● Aislese del trabajo y de la tierra.	● Mantenga el material combustible fuera del área de trabajo.	● Protéjase los ojos, los oídos y el cuerpo.
French **ATTENTION**	● Ne laissez ni la peau ni des vêtements mouillés entrer en contact avec des pièces sous tension. ● Isolez-vous du travail et de la terre.	● Gardez à l'écart de tout matériel inflammable.	● Protégez vos yeux, vos oreilles et votre corps.
German **WARNUNG**	● Berühren Sie keine stromführenden Teile oder Elektroden mit Ihrem Körper oder feuchter Kleidung! ● Isolieren Sie sich von den Elektroden und dem Erdboden!	● Entfernen Sie brennbarres Material!	● Tragen Sie Augen-, Ohren- und Körperschutz!
Portuguese **ATENÇÃO**	● Não toque partes elétricas e electrodos com a pele ou roupa molhada. ● Isole-se da peça e terra.	● Mantenha inflamáveis bem guardados.	● Use proteção para a vista, ouvido e corpo.
Japanese **注意事項**	● 通電中の電気部品、又は溶材にヒフやぬれた衣で触れないこと。 ● 施工物やアースから身体が絶縁されている様にして下さい。	● 燃えやすいものの側での溶接作業は絶対にしてはなりません。	● 目、耳及び身体に保護具をして下さい。
Chinese **警 告**	● 皮肤或湿衣物切勿接触带电部件及焊条。 ● 使你自己与地面和工件绝缘。	● 把一切易燃物品移离工作場所。	● 保戴眼、耳及身體勞動保護用具。
Korean **위 험**	● 전도체나 용접봉을 젖은 의복 또는 피부로 절대 접촉치 마십시오. ● 모재와 접지를 접촉치 마십시오.	● 인화성 물질을 접근 시키지 마시오.	● 눈, 귀와 몸에 보호장구를 착용하십시오.
Arabic **تحذير**	● لا تلمس الاجزاء التي يسري فيها التيار الكهربائي أو الالكترود بجلد الجسم أو بالملابس المبللة بالماء. ● ضع عازلا على جسمك خلال العمل.	● ضع المواد القابلة للاشتعال في مكان بعيد.	● ضع أدوات وملابس واقية على عينيك وأذنيك وجسمك.

READ AND UNDERSTAND THE MANUFACTURER'S INSTRUCTION FOR THIS EQUIPMENT AND THE CONSUMABLES TO BE USED AND FOLLOW YOUR EMPLOYER'S SAFETY PRACTICES.

SE RECOMIENDA LEER Y ENTENDER LAS INSTRUCCIONES DEL FABRICANTE PARA EL USO DE ESTE EQUIPO Y LOS CONSUMIBLES QUE VA A UTILIZAR, SIGA LAS MEDIDAS DE SEGURIDAD DE SU SUPERVISOR.

LISEZ ET COMPRENEZ LES INSTRUCTIONS DU FABRICANT EN CE QUI REGARDE CET EQUIPMENT ET LES PRODUITS A ETRE EMPLOYES ET SUIVEZ LES PROCEDURES DE SECURITE DE VOTRE EMPLOYEUR.

LESEN SIE UND BEFOLGEN SIE DIE BETRIEBSANLEITUNG DER ANLAGE UND DEN ELEKTRODENEINSATZ DES HERSTELLERS. DIE UNFALLVERHÜTUNGSVORSCHRIFTEN DES ARBEITGEBERS SIND EBENFALLS ZU BEACHTEN.

● Keep your head out of fumes. ● Use ventilation or exhaust to remove fumes from breathing zone.	● Turn power off before servicing.	● Do not operate with panel open or guards off.	**WARNING**
● Los humos fuera de la zona de respiración. ● Mantenga la cabeza fuera de los humos. Utilice ventilación o aspiración para gases.	● Desconectar el cable de alimentación de poder de la máquina antes de iniciar cualquier servicio.	● No operar con panel abierto o guardas quitadas.	Spanish **AVISO DE PRECAUCION**
● Gardez la tête à l'écart des fumées. ● Utilisez un ventilateur ou un aspirateur pour ôter les fumées des zones de travail.	● Débranchez le courant avant l'entretien.	● N'opérez pas avec les panneaux ouverts ou avec les dispositifs de protection enlevés.	French **ATTENTION**
● Vermeiden Sie das Einatmen von Schweibrauch! ● Sorgen Sie für gute Be- und Entlüftung des Arbeitsplatzes!	● Strom vor Wartungsarbeiten abschalten! (Netzstrom völlig öffnen; Maschine anhalten!)	● Anlage nie ohne Schutzgehäuse oder Innenschutzverkleidung in Betrieb setzen!	German **WARNUNG**
● Mantenha seu rosto da fumaça. ● Use ventilação e exhaustão para remover fumo da zona respiratória.	● Não opere com as tampas removidas. ● Desligue a corrente antes de fazer serviço. ● Não toque as partes elétricas nuas.	● Mantenha-se afastado das partes moventes. ● Não opere com os paineis abertos ou guardas removidas.	Portuguese **ATENÇÃO**
● ヒュームから頭を離すようにして下さい。 ● 換気や排煙に十分留意して下さい。	● メンテナンス・サービスに取りかかる際には、まず電源スイッチを必ず切って下さい。	● パネルやカバーを取り外したままで機械操作をしないで下さい。	Japanese **注意事項**
● 頭部遠離煙霧。 ● 在呼吸區使用通風或排風器除煙。	● 維修前切斷電源。	● 儀表板打開或沒有安全罩時不準作業。	Chinese **警 告**
● 얼굴로부터 용접가스를 멀리하십시요. ● 호흡지역으로부터 용접가스를 제거하기 위해 가스제거기나 통풍기를 사용하십시요.	● 보수전에 전원을 차단하십시요.	● 판넬이 열린 상태로 작동치 마십시요.	Korean **위 험**
● ابعد رأسك بعيداً عن الدخان. ● استعمل التهوية أو جهاز ضغط الدخان للخارج لكي تبعد الدخان عن المنطقة التي تتنفس فيها.	● اقطع التيار الكهربائي قبل القيام بأية صيانة.	● لا تشغل هذا الجهاز اذا كانت الاغطية الحديدية الواقية ليست عليه.	Arabic **تحذير**

LEIA E COMPREENDA AS INSTRUÇÕES DO FABRICANTE PARA ESTE EQUIPAMENTO E AS PARTES DE USO, E SIGA AS PRÁTICAS DE SEGURANÇA DO EMPREGADOR.

使う機械や溶材のメーカーの指示書をよく読み、まず理解して下さい。そして貴社の安全規定に従って下さい。

請詳細閱讀並理解製造廠提供的說明以及應該使用的銀焊材料，並請遵守貴方的有關勞動保護規定。

이 제품에 동봉된 작업지침서를 숙지하시고 귀사의 작업자 안전수칙을 준수하시기 바랍니다.

اقرأ بتمعن وافهم تعليمات المصنع المنتج لهذه المعدات والمواد قبل استعمالها واتبع تعليمات الوقاية لصاحب العمل.

CUSTOMER ASSISTANCE POLICY

The business of Lincoln Electric is manufacturing and selling high quality welding equipment, automated welding systems, consumables, and cutting equipment. Our challenge is to meet the needs of our customers, who are experts in their fields, and to exceed their expectations. On occasion, purchasers may ask Lincoln Electric for information or technical information about their use of our products. Our employees respond to inquiries to the best of their ability based on information and specifications provided to them by the customers and the knowledge they may have concerning the application. Our employees, however, are not in a position to verify the information provided or to evaluate the engineering requirements for the particular weldment, or to provide engineering advice in relation to a specific situation or application. Accordingly, Lincoln Electric does not warrant or guarantee or assume any liability with respect to such information or communications. Moreover, the provision of such information or technical information does not create, expand, or alter any warranty on our products. Any express or implied warranty that might arise from the information or technical information, including any implied warranty of merchantability or any warranty of fitness for any customers' particular purpose or any other equivalent or similar warranty is specifically disclaimed.

Lincoln Electric is a responsive manufacturer, but the definition of specifications, and the selection and use of specific products sold by Lincoln Electric is solely within the control of, and remains the sole responsibility of the customer. Many variables beyond the control of Lincoln Electric affect the results obtained in applying these types of fabrication methods and service requirements.

WELD FUME CONTROL EQUIPMENT

The operation of welding fume control equipment is affected by various factors including proper use and positioning of the equipment, maintenance of the equipment and the specific welding procedure and application involved. Worker exposure level should be checked upon installation and periodically thereafter to be certain it is within applicable OSHA PEL and ACGIH TLV limits.

THE LINCOLN ELECTRIC COMPANY
22801 St. Clair Avenue • Cleveland, OH • 44117-1199 • U.S.A.
Phone: +1.216.481.8100 • www.lincolnelectric.com